TDC

Theater Deployable Communications

Baseline Requirements Document

Initial Communications Element - Voice/NIPRNET Module
(v2)

Nov 2003

ESC/NI4T
5 Eglin Street
Hanscom AFB, MA 01731

Approved for public release; distribution is unlimited.

Table of Contents

1.0 SCOPE - 6
2.0 APPLICABLE DOCUMENTS - 7
3.0 REQUIREMENTS - 8
3.1 Module Definition - 8
3.2 Performance Requirements - 9
3.2.1 Electrical Interface Requirements (External) - - - - - - - - - - - - - - - - - - 9
3.2.1.1 Prime Power - 10
3.2.1.2 Voice Connections - 10
3.2.1.2.1 Voice Subscriber Interfaces - 11
3.2.1.2.2 T-1/ISDN-PRI - 11
3.2.1.2.3 Voice Switch Bus - 11
3.2.1.2.4 Clock Sync - 11
3.2.1.3 Data Connections - 11
3.2.1.3.1 10BaseT/100BaseTX - 11
3.2.1.3.2 10/100/1000BaseT - 12
3.2.1.3.3 Serial Router Ports - 12
3.2.1.4 IP and Circuit Switch Admin Interfaces - - - - - - - - - - - - - - - - - 13
3.2.2 Electrical Interface Requirements (Internal) - - - - - - - - - - - - - - - - - - 13
3.2.3 Functional Requirements - 13
3.2.3.1 Basic Configuration - 13
3.2.3.1.1 Circuit Switch Functions - 13
3.2.3.1.2 Local Subscriber Access - 13
3.2.3.1.3 Voice Switch Administration - 13
3.2.3.1.4 Ethernet Switch 10BaseT/100Base TX LAN Access - - - - - - 14
3.2.3.1.5 IP Switch Administration - 14
3.2.3.1.6 Modular Router - 14
3.2.3.1.7 Router Software - 14
3.2.3.1.8 Router Administration - 14
3.2.3.1.9 Servers - 15
3.2.3.1.10 Keyboard / Monitor - 15
3.2.3.1.11 KVM Switch - 15
3.2.3.2 Configuration Options (Kits) - 15
3.2.4 Physical Characteristics - 15
3.2.4.1 Transit Case - 15
3.2.4.2 Weight - 16
3.2.4.3 Storage Space - 16
3.2.4.4 Marking - 16
3.2.5 Cables and Accessories - 16
3.2.6 Reliability - 16
3.2.7 Maintainability - 17
3.2.7.1 Mean Time Between Preventive Maintenance - - - - - - - - - - - - - 17
3.2.8 Environmental Conditions - 17
3.2.8.1 Temperature - 17

3.2.8.2 Relative Humidity - 17
3.2.8.3 Altitude - 18
3.2.8.4 Sand and Dust - 18
3.2.8.5 Shock - 18
3.2.8.6 Vibration - 18
3.3 Design and Construction - 18
3.3.1 Material Parts and Processes - 18
3.3.2 Safety - 18
3.3.2.1 Electrical Safety - 19
3.3.2.2 Mechanical Safety - 19
3.4 Logistics - 19
4.0 QUALITY ASSURANCE PROVISIONS - 20
4.1 General - 20
4.2 Responsibility for Inspection - 20
4.3 Product Qualification Test (PQT)- 20
4.4 Production Acceptance Test (PAT) - 20
4.5 Verification Cross Reference Matrix (VCRM) - - - - - - - - - - - - - - - - - - 20
4.5.1 Not Required (N/R) - 20
4.5.2 Inspection - 20
4.5.3 Analysis - 21
4.5.4 Demonstration - 21
4.5.5 Test - 21
5.0 PREPARATION FOR DELIVERY - 24
6.0 Baseline Configuration - 25
6.1 Equipment - 25
6.2 Elevation Drawings - 28
6.3 Cable Diagrams - 30
6.4 Interconnect Diagrams - 47

List of Tables

Table 1 - Standards and Applicable Documents - 7
Table 2 - Voice/NIPRNET Module External Interface Characteristics - - - - - - - - - - - 9
Table 3 - Voice Connections - 10
Table 4 - RJ-45 Connection Pinout for 10BaseT and 100 Mbps Connector - - - - - - - 12
Table 5 - EIA-530 Synchronous Serial Data Interface - - - - - - - - - - - - - - - - - - 12
Table 6 - Admin - 13
Table 7 - Cables and Accessories included with SIPRNET Module - - - - - - - - - - - 16
Table 8 - MTBF of Major Components - 16
Table 9 - Module Temperature Characteristics - 17
Table 10 - Module Humidity Characteristics - 17
Table 11 - Module Altitude Characteristics - 18
Table 12 - Verification Cross Reference Matrix - 21
Table 13 - Equipment List - 25
Table 14 - Cable Diagrams - 30

List of Figures

Figure 1 - Voice/NIPRNET Module Application in TDC ICE Package - - - - - - - - - - - 9
Figure 2 - Front Elevation - 28
Figure 3 - Rear Elevation - 29

1.0 SCOPE

This requirements document establishes the performance, manufacture and test requirements for the TDC ICAP Initial Communications Element Voice/NIRPNET Module v2.

2.0 APPLICABLE DOCUMENTS

To the extent specified herein, the following documents of latest current issue on the date of this Baseline Requirements Document form part of this BRD.

Table 1 - Standards and Applicable Documents

Document Number	Title
IEEE 802.3	Carrier Sense Multiple Access with Collision Detection (CSMA/CD) access method and physical layer specification.
IEEE 802.3ab	100-Mbps baseband Fast Ethernet specification using two strands of multimode fiber-optic cable per link. 100BaseFX link cannot exceed 1312 feet (400 meters) in length. Copper gigabit ethernet specfication.
IEEE 802.3af	Data Terminal Equipment Power via Media Dependent Interface (MDI)
EIA/TIA-232-E Jul-91	Interface Between Data Terminal Equipment and Data Circuit-Terminating Equipment Employing Serial Binary Data Interchange (Rates to 20kbps)
TIA/EIA 530 Jun-92	High Speed 25-Position Interface for Data Terminal Equipment and Data Circuit-Terminating and Data Circuit-Terminating Equipment.
ANSI T1.601 - 1992	American National Standard for Telecommunications - Minimal Set of Bearer Services for the ISDN S Interface
ANSI T1.603 - 1990	American National Standard for Telecommunications - Minimal Set of Bearer Services for the ISDN Primary Rate Interface
ANSI TIA/EIA-470-B 1997	Telephone Instruments with Loop Signaling for Voice Applications
ISO/IEC 8802-3 1996 ANSI/IEEE Std 802.3	Information Technology- Local Metropolitan Area Networks-- Part3: Carrier Sense Multiple Access with Collision Detection (CSMA/CD) Access Method and Physical Layer Specification. (Documents are one in the same; from IEEE, ANSI, ISO and IEC)
MIL-STD-810F	Environmental Test Methods
REDCOM Laboratories, INC	IGX•2000 ISDN Gateway Exchange User's Manual for Version 6X
Various	Cisco Manuals
	TDC Standards Document

3.0 REQUIREMENTS

3.1 Module Definition

The Voice/NIPRNET Module provides unclassified voice, data, and E-mail functions. It contains a Voice Circuit Switch, 10/100 Ethernet Switch, Router and NIPRNET Servers that provide the following functions:

<u>Switched Circuit Network (SCN) Functions</u>
Access for local phone (POTS and digital) users
Trunks for SCN backbone
Local and remote configuration management

<u>Unclassified Switched Network Functions</u>
Access for local 10BaseT/100BaseTX Ethernet users
Local and remote configuration management

<u>Unclassified E-Mail Functions</u>
Access to unclassified E-mail

Figure 1 shows the Voice/NIPRNET Module internal and external interconnections. Detailed characteristics for each function may be found in Paragraph 3.2.

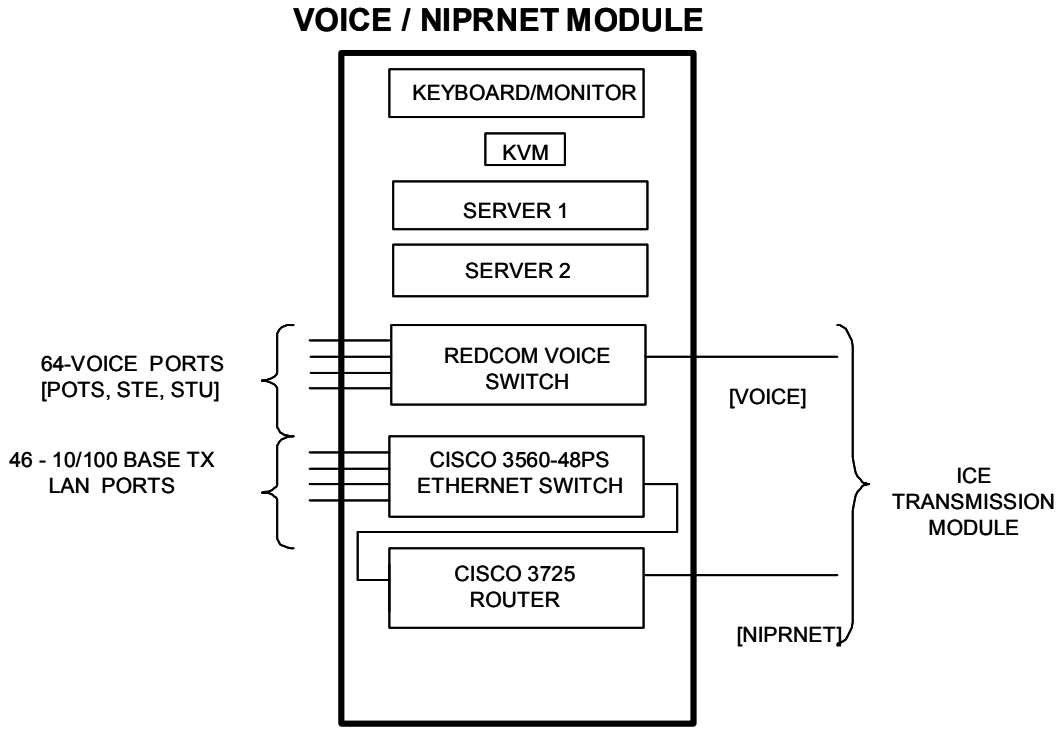

Figure 1 - Voice/NIPRNET Module Application in TDC ICE Package

3.2 Performance Requirements

3.2.1 Electrical Interface Requirements (External)

The Voice/NIPRNET Module includes the number and type of external interfaces shown in Table 2.

Table 2 - Voice/NIPRNET Module External Interface Characteristics

Signal Name	Quantity	Connector	I/O	Internal Interface	Electrical Characteristics
Prime power	1	IEC 320-C20 Receptacle	I	Local power source	100-130 VAC 200-240 VAC 50-60 HZ

Table 2 - Voice/NIPRNET Module External Interface Characteristics

Signal Name	Quantity	Connector	I/O	Internal Interface	Electrical Characteristics
Voice Connections	24	RJ 11 Pin Receptacle	I/O	Remote & local users	RJ 11
Voice Sectors	3	TELCO 50 Pin Receptacle	I/O	Remote and local users	ANSI TIA/EIA-470-B 1997
IP Switch Admin	1	DB 9F	I/O	Local administrator – I/O DF	EIA RS-232
Circuit Switch Admin	1	DB-9F	I/O	Local/Remote	EIA-RS232
Circuit Switch Admin	1	RJ 45	I/O	Local administrator – I/O DF	IEEE Std 802.3
Clock Sync In	1	Cannon CIR 020R	I	Voice switch	REDCOM proprietary
Clock Sync Out	1	Cannon CIR 020R	O	Voice switch	REDCOM proprietary
Voice Switch Bus	2	Cannon CIR 020R	I/O	Voice switch	REDCOM proprietary
T-1/ISDN-PRI	1	RJ 45	I/O	Trunk connectivity 3560-48PS	ANSI T1.603-1990
10BaseT/ 100BaseTX	46	RJ45	I/O	3560-48PS Local users	IEEE 802.3
10/100/1000BaseT	3	RJ45	I/O	3560-48PS LAN Port	IEEE 802.3
10/100BaseTX	2	RJ45	I/O	3725 10/100 LAN Port	IEEE 802.3
Serial Router Ports	4	DB–25F	I/O	3725 NM-4T	EIA–530

3.2.1.1 Prime Power

The Voice/NIPRNET Module operates from 100 to 130 VAC and 200 to 240 VAC, 50 to 60 Hz, single-phase, three-wire power. In accordance with the TDC Standards document Voice/ NIPRNET Module includes:

- An IEC–320 male connector (or equivalent) for prime power.
- An internal line transient suppressor to minimize line variations.

3.2.1.2 Voice Connections

Each 50-pin TELCO plug provides up to 24 each 2-wire phone connections. Pin assignments are as shown in Table 3:

Table 3 - Voice Connections

Pin	Signal	Pin	Signal	Pin	Signal	Pin	Signal
1	Ring	26	Tip	13	Ring	38	Tip
2	Ring	27	Tip	14	Ring	39	Tip

Table 3 - Voice Connections

Pin	Signal	Pin	Signal	Pin	Signal	Pin	Signal
3	Ring	28	Tip	15	Ring	40	Tip
4	Ring	29	Tip	16	Ring	41	Tip
5	Ring	30	Tip	17	Ring	42	Tip
6	Ring	31	Tip	18	Ring	43	Tip
7	Ring	32	Tip	19	Ring	44	Tip
8	Ring	33	Tip	20	Ring	45	Tip
9	Ring	34	Tip	21	Ring	46	Tip
10	Ring	35	Tip	22	Ring	47	Tip
11	Ring	36	Tip	23	Ring	48	Tip
12	Ring	37	Tip	24	Ring	49	Tip
				25	N/C	50	N/C

3.2.1.2.1 Voice Subscriber Interfaces

The Voice/NIPRNET Module provides 24 voice subscriber voice interfaces on the rear RJ-11 Jack panel. These are wired in parallel with Telco 50 pin Sector1.

.

3.2.1.2.2 T-1/ISDN-PRI

The SCN Backbone signal is a 1.544 Mbps serial data formatted as a T-1 or ISDN-PRI trunk. The SCN Backbone can be accessed via RJ 45 connection.

3.2.1.2.3 Voice Switch Bus

The Voice Switch Bus connectors are Cannon CIR 020R jacks with the pinouts being proprietary.

3.2.1.2.4 Clock Sync

The Voice Switch Clock Sync connectors are Cannon CIR 020R jacks with the pinouts being proprietary.

3.2.1.3 Data Connections

3.2.1.3.1 10BaseT/100BaseTX

The NIPRNET data connections provide 10BaseT/100BaseTX connectivity to the data network. Each connector is an RJ45 modular female jack connector. Pin assignments are in accordance with IEEE 802.3 for 100BaseTX Ethernet signals over Unshielded Twisted Pair (UTP) cable, as shown in Table 4. All inactive jacks shall be physically covered.

Table 4 - RJ-45 Connection Pinout for 10BaseT and 100 Mbps Connector

Pin	Signal
1	TPO +
2	TPO -
3	TP1 +
4	TP2 +
5	TP2 -
6	TP1 -
7	TP3 +
8	TP3 -

3.2.1.3.2 10/100/1000BaseT

The 10/100/1000 Base T connection provides gigabit Ethernet connectivity to the data network. Each connector is an RJ45 modular female jack connector.

3.2.1.3.3 Serial Router Ports

Interface connectors are DB–25 female receptacles. Pin assignments are in accordance with EIA–530 as shown in Table 5.

Table 5 - EIA-530 Synchronous Serial Data Interface

Pin	Signal	I/O	Pin	Signal	I/O
1	Shield	–	14	Transmit Data Return	O
2	Transmit Data	O	15	Transmit Clock	I
3	Receive Data	I	16	Receive Data Return	I
4	Request to Send	O	17	Receive Clock	–
5	Clear to Send	I	18	NC	–
6	Data Set Ready	I	19	Request to Send Return	O
7	Signal Ground	–	20	Terminal Ready	O
8	Receiver Ready (DCD)	I	21	NC	–
9	Receive Clock Return	–	22	Data Set Ready Return	I
10	Receiver Ready Return	I	23	Terminal Ready Return	O
11	Terminal Timing	O	24	Terminal Timing Return	O
12	Transmit Clock Return	I	25	NC	–
13	Clear to Send Return	I			

Note: I/O direction is with respect to the Router

3.2.1.4 IP and Circuit Switch Admin Interfaces

The Circuit Switch and IP Ethernet Switch ports are in accordance with the DB 9, RS-232 standards using the VT100 Emulators (9600 bps, No Parity, 8 Data Bits, 1 Stop Bit). Each Admin connector is a DB-9F with pin assignments as shown in Table 6:

Table 6 - Admin

Pin	Signal	Pin	Signal	Pin	Signal
1	Data Carrier Detect	4	Data Terminal Ready	7	Request to Send
2	Received Data	5	Signal Ground	8	Clear to Send
3	Transmitted Data	6	Data Set Ready	9	Ring Indicator

3.2.2 Electrical Interface Requirements (Internal)

The Voice/NIPRNET module Utilizes several types of internal interfaces - see paragraph 6.3 for details.

3.2.3 Functional Requirements

3.2.3.1 Basic Configuration

The Voice/NIPRNET Module includes both an internal circuit switch that implements a private branch exchange (PBX) and IP Ethernet switchable ports to permit users to create a local area IP data network. It also provides two servers to support unclassified E-mail and file / print server functions. The following subsections provide details of the functionality of the major segments of the Voice/NIPRNET Module as shown in Figure 1.

3.2.3.1.1 Circuit Switch Functions

The Voice/NIPRNET Module provides local phone access for up to 64 analog users to the Switched Circuit Network, and as well as one T-1/ISDN-PRI trunk connection. The circuit switch is a REDCOM IGX*C Exchange, configured with the following cards:

- 8 each Line Circuit cards
- 1 each DS-1 trunk card with echo cancellation
- 1 each LS/GS ringdown trunk card
- 1 each MTI card
- 1 each. Clock synchronizer card

3.2.3.1.2 Local Subscriber Access

The Voice/NIPRNET Module provides access to the Circuit Switch for 64 local telephone subscribers via 2-wire analog circuits. Additionally, the switch can support faxes, modems, STU IIIs, and STEs .

3.2.3.1.3 Voice Switch Administration

The Voice/NIPRNET Module provides the capability for the management of the voice switch through a local laptop computer via the Voice Switch Admin connector at the module's Signal Entry Panel, a remote location with an external modem or from 10 Base T Ethernet port. Management of the following functions is provided:

a) Configuration
b) Health and Status
c) Control
d) Downloading statistical data

3.2.3.1.4 Ethernet Switch 10BaseT/100Base TX LAN Access

The Cisco 3560-48PS Ethernet switch provides access for local data users to the TDC ICE unclassified switched network. Access is provided for up to 46 10BaseT/100BaseTX users.

3.2.3.1.5 IP Switch Administration

The IP functions of the Ethernet switch are manageable via an external PC computer interconnected to the IP Switch Admin connector at the module's I/O DF. Management of the following functions is provided:

a) Configuration
b) Status
c) Control

3.2.3.1.6 Modular Router

The Cisco 3725 router provides connectivity to the ICE backbone network for transport to exterior data networks. The router consists of the following interfaces:

- 2 fixed FastEthernet 10/100BaseTX ports built into the chassis
- 1 NM slot1 populated with 1 four port serial network module used to support the Synchronous Serial Router ports

Further details for this router can be found at http://www.cisco.com/

3.2.3.1.7 Router Software

The Cisco 3725 router is delivered with the Cisco Internetworking Operating System (IOS) with Enterprise PLUS IPSEC 3DES version 12.2(15) T2. 32 MB of Flash and 128 MB DRAM memory comes standard. This memory will be upgraded to 64MB of Flash and 256 DRAM. Additional information can be found at http://www.cisco.com/.

3.2.3.1.8 Router Administration

The router is configured and managed via an external PC computer terminal emulation or a VT-100 terminal connected at the module's I/O DF, using 9600 baud, 8 data, no parity, 1 stop bit as the connection parameters. Access to the following functions is provided:

- Router configuration
- Router status

3.2.3.1.9 Servers

The NIPRNET servers provide unclassified E-Mail service for the ICE package as well as unclassified file and prints server functions. The servers are 1U high servers with the following features:

- Size - The size configuration is 19 mountable, IU high.
- Hard Drives - Externally removable hard drives, configured with hardware RAID 1 (mirror). Each hard drive capacity is at least 140 GB. The hard drives have a Small Computer System Interface (SCSI) interface.
- Memory - At least 4 GB of memory (RAM).
- Peripherals - All servers have 3 1/2" Floppy and CD-RW/DVD readers. Video, dual 10/100 NIC card and a SCSI card are provided.

The servers will run Windows 2003 Server OS and Exchange 2003 software. Symantec Antivirus 8.1, Symantec Antivirus for Exchange and Kiwi CAT Tools are provided as GFE.

3.2.3.1.10 Keyboard / Monitor

The rack-mounted Monitor/Keyboard from Compaq provides operation/control of the servers.

3.2.3.1.11 KVM Switch

The KVM switch provides an on-screen interface controlled by the keyboard for each user. The KVM is capable of providing different levels of login based on authorization / authentication.

3.2.3.2 Configuration Options (Kits)

None

3.2.4 Physical Characteristics

3.2.4.1 Transit Case

The module is housed in a 13 U transportable transit case, approximately 22.5"W. x 34.5"D. x 26.8"H. The transit cases are designed to stack on top of and mechanically interlock to like cases; interior equipment frame slides out for access. The transit cases with their covers in place are designed to protect the electronic equipment inside from direct exposure to environmental conditions; e.g., rain, snow, ice, dust, etc., likely to be encountered during world wide military transit.

3.2.4.2 Weight

The module, including all internally carried cables, does not exceed TBS lbs.

3.2.4.3 Storage Space

The module transit case include storage pouches within its covers to contain cables, manuals, etc. that must be transported and used with the module.

3.2.4.4 Marking

See TDC Standards Document for required markings.

3.2.5 Cables and Accessories

The module includes the cables and terminators listed in Table 7. Strain relief and cable management hardware are provided with the module.

Table 7 - Cables and Accessories included with SIPRNET Module

Function	Color Code	Quantity	Description
Power	N/R	1	IEC-320 C20 Jack to NEMA 5-15P
(P04) Jumper Cable	N/R	1	RJ-45 to DB-15 cable
(P03) Jumper Cable	N/R	3	Straight-thru Telco-50 – Telco-50 cables
(P02) Jumper Cable	N/R	2	Straight-thru RJ45 – RJ45 cable
(P01) Configuration Cable	N/R	1	EIA–232 control cable w/ DB–9F to DB–9M connectors for PC COM port

3.2.6 Reliability

The module with its standard complement of LRUs, have a mean time between failure (MTBF) commensurate with similar commercial equipment in its class. The actual MTBF for the major system components are shown in Table 8. Where reliability data is not readily available from the vendor, this is indicated.

Table 8 - MTBF of Major Components

Component	MTBF
IGX*C Circuit Switch	25,000 hours
Cisco 3725 Router	20,000 to 50,000 hours
Cisco 3560-48 PS Ethernet Switch	268,292 hours
Server	TBD

3.2.7 Maintainability

Maintainability characteristics will be part of the selection criteria for all hardware. Ease of maintenance, such as accessibility to Line Replaceable Units, fault detection/isolation software capability, and fault annunciation will be considered.

3.2.7.1 Mean Time Between Preventive Maintenance

The Mean Time Between Preventive Maintenance, during operation, is 30 days. The duration of preventive maintenance actions such as corrosion control, cleaning filters, etc., does not exceed 30 minutes.

3.2.8 Environmental Conditions

During storage, transport and operation the modules can withstand exposure to temperatures as shown in Table 9.

3.2.8.1 Temperature

Temperature characteristics for the major equipment components are shown in Table 9.

Table 9 - Module Temperature Characteristics

Equipment	Temperature (in degrees C)	
	Operating	Non-Operating
IGX*C Circuit Switch	0 to 50	Not Available
Cisco 3725 Router	0 to 40	-25 to 70
Cisco 3560-48PS Ethernet Switch	-5 to 45	-25 to 70
Server	TBD	TBD

3.2.8.2 Relative Humidity

Relative humidity characteristics for the major equipment components are shown in Table 10.

Table 10 - Module Humidity Characteristics

Equipment	Humidity
	Non-Condensing
IGX*C Circuit Switch	5 to 95%
Cisco 3725 Router	5 to 95%
Cisco 3560-48PS Ethernet Switch	10 to 90%
Server	TBD

3.2.8.3 Altitude

Altitude characteristics for the major equipment components are shown in Table 11.

Table 11 - Module Altitude Characteristics

Equipment	Altitude (feet)	
	Operating	**Non-Operating**
IGX*C Circuit Switch	Not Available	Not Available
Cisco 3725 Router	10,000 ft	Not Available
Cisco 3560-48PS Ethernet Switch	10,000 ft	Not Available
Server	TBD	TBD

3.2.8.4 Sand and Dust

During storage and transport, the modules are protected when exposed to sand and dust in accordance with the best commercial practices for close proximity to operating aircraft. During operation with covers removed, the modules can withstand sand and dust in accordance with the best commercial practices for natural conditions.

3.2.8.5 Shock

Module equipment racks are equipped with rubber shock isolation mounts and is protected from shocks induced during handling, setup and tear down. Modules and components can operate without degradation following exposure to the non-operating shock environment described by Method 516.5, Procedure VI (Bench Handling) of MIL STD 810F.

3.2.8.6 Vibration

The modules are equipped with rubber shock isolation mounts so that the modules can withstand the vibration encountered while being transported by commercial and military airlift, sealift and vehicular (over unimproved roads) systems. MIL-STD-810F, Method 514.5, Procedure I, Categories 4, 7 and 8. applies; alternative procedures may be substituted after TDC Program Office approval.

3.3 Design and Construction

3.3.1 Material Parts and Processes

This module is built to good commercial practices. Mechanical and electrical interchangeability exists between like systems, subsystems, assemblies, subassemblies and replaceable parts.

3.3.2 Safety

This module shall not present a safety, fire or health hazard to personnel.

3.3.2.1 Electrical Safety

This module is designed to eliminate the hazard to personnel of inadvertent lethal voltage contact. All electrical conductors carrying voltages in excess of 70 volts shall be insulated to prevent contact or covered by a protective barrier. All removable protective barriers shall be interlocked to automatically disconnect power behind the barrier upon removal or clearly marked with a warning label that indicates the voltage potential that will be encountered behind the barrier. All warning labels shall remain visible after the cover has been removed.

3.3.2.2 Mechanical Safety

Sharp surfaces shall have protective covers or other suitable features to minimize injury where personnel are likely to be exposed to such surfaces.

3.4 Logistics

This module accommodates a two level maintenance concept: organizational (Air Force personnel) and depot (contractor personnel). Removal and replacement of an LRU is defined at the organizational level and any needed repair of the LRU is defined at the depot level. Any special test or support equipment required to effect removal or replacement of an LRU at the organizational level can be provided as part of the module. No more than two persons shall be required to remove or replace an LRU.

An LRU is defined as the lowest element of the module which can be isolated to be faulty through inspection; built-in test; technical manuals; TDC-ICAP system performance; spares substitution; or other diagnostic aid approved by the Government for organizational level maintenance, exclusive of expendables such as fuses, lamps and LEDs. An LRU is defined at the card/module level or higher.

4.0 QUALITY ASSURANCE PROVISIONS

4.1 General

The quality assurance program includes tests and other evaluations to the extent specified herein. The quality assurance program is designed to verify the electrical, mechanical and functional characteristics of each module. The purpose is to ensure that each module complies with or performs better than the requirements specified herein.

4.2 Responsibility for Inspection

Unless otherwise specified in the contract, the contractor shall be responsible for the performance of all inspection requirements and may use his own or any other facilities suitable for the performance of the inspection requirements. The Government reserves the right to perform any of the inspections set forth in the specification where such inspections are deemed necessary to assure supplies and services conform to the prescribed requirements.

4.3 Product Qualification Test (PQT)

Inspections, analyses, demonstrations and tests verify compliance of Section 3 of this specification on the first production unit.

4.4 Production Acceptance Test (PAT)

Each module delivered to the Government undergoes an Acceptance Test Process as identified in Table 12. The acceptance test verifies that the module interfaces are operating properly prior to delivery to the Government.

4.5 Verification Cross Reference Matrix (VCRM)

Table 12 provides a list of each Section 3 requirement and the verification method to be used. The following paragraphs define the codes employed in the VCRM. Unless otherwise noted, where more than more one verification method is shown, one method or a combination of methods may be used to show compliance.

4.5.1 Not Required (N/R)

This method indicates that verification is not required because the paragraph is a title, heading, general introductory paragraph or statement of a goal and contains no “shall” or “must” statements.

4.5.2 Inspection

Inspection is a method of verification of the module performance or characteristics by examination of the equipment or associated documentation. Inspections are conducted with the use of inspection tools, measurement devices, visual means and comparison. Most inspections apply to verification of requirements associated with physical characteristics such as size, weight,

appearance, adherence to specified standards and engineering practices, quality design, and construction supported with quality documentation. Inspections also include the auditing of manufacturer's data that verifies the performance of non-developmental items that comprise the TDC ICAP module. Inspections may occur during any assembly stage of the unit under test.

4.5.3 Analysis

Analysis is a method of verification through technical evaluation of calculations, computations, models, analytical solutions, use of studies, reduced data, and/or representative data to determine that the item conforms to the specified requirements.

4.5.4 Demonstration

Demonstration is a method of verification whereby the properties, characteristics and parameters of the item are determined by observation alone and without the use of instrumentation for quantitative measurements. This method is used when a requirement does not contain a specific numerical parameter that must be measured. Demonstrations may occur during verification of a unit under test at any assembly stage. Pass/fail criteria are simple yes/no indications of functional performance since no quantitative values are specified.

4.5.5 Test

Test is a method to verify that a specified requirement is met by thoroughly exercising the applicable item under specified conditions and by using the appropriate instrumentation in accordance with test procedures. This method requires the use of laboratory equipment, simulators, or services to verify compliance to the specified requirements. This method is used when it is practicable to make direct or indirect measurement of a specified numerical parameter to verify compliance with a requirement. Tests may occur during verification of a unit at any assembly stage. Actual measured values are recorded, and pass/fail is determined by comparing the measured value with the specified value. Measurement accuracy is precise enough to ensure that the measured value is within the specified tolerance.

Table 12 - Verification Cross Reference Matrix

		Verification Method					
			PQT				
Paragraph	**Title**	**N/R**	**Inspect**	**Analysis**	**Demo**	**Test**	**ATP**
3.	Requirements	X					
3.1	Module Definition	X					
3.2	Performance Requirements	X					
3.2.1	Electrical Interface Requirements (External)	X					
3.2.1.1	Prime Power					X	X
3.2.1.2-4	Connectors				X		X
3.2.2	Electrical Interface (Internal)	X					
3.2.3	Functional Requirements	X					

Table 12 - Verification Cross Reference Matrix

Paragraph	Title	Verification Method					
			PQT				
		N/R	Inspect	Analysis	Demo	Test	ATP
3.2.3.1	Basic Configuration	X					
3.2.3.1.1	Circuit Switch Functions				X		X
3.2.3.1.2	Local Subscriber Access				X		X
3.2.3.1.3	Voice Switch Administration				X		X
3.2.3.1.4	Ethernet Switch Access				X		X
3.2.3.1.5	IP Administration	X			X		X
3.2.3.1.6	Modular Router				X		X
3.2.3.1.7	Router Software				X		X
3.2.3.1.8	Router Administration				X		X
3.2.3.1.9	Servers				X		X
3.2.3.1.10	Keyboard Monitor				X		X
3.2.3.2.11	KVM Switch				X		X
3.2.3.2	Configuration Options	X					
3.2.3.2.1	10BaseFL Connectivity	X					
3.2.3.2.2	Circuit Switch Configuration Options	X					
3.2.3.2.3	Configuration Kits	X					
3.2.4	Physical Characteristics	X					
3.2.4.1	Transit Case		X				
3.2.4.2	Weight					X	
3.2.4.3	Storage Space		X				
3.2.4.4	Marking		X				
3.2.5	Cables and Accessories				X		X
3.2.6	Reliability			X			
3.2.7	Maintainability			X			
3.2.7.1	Mean Time Between Preventive Maintenance [MTBPM]			X			
3.2.8	Environmental Conditions	X					
3.2.8.1	Temperature					X	
3.2.8.2	Humidity			X			
3.2.8.3	Altitude			X			
3.2.8.4	Sand and Dust			X			
3.2.8.5	Shock					X	
3.2.8.6	Vibration					X	
3.3	Design and Construction	X					
3.3.1	Material Parts and Processes			X			
3.3.2	Safety	X					
3.3.2.1	Electrical Safety			X		X	

Table 12 - Verification Cross Reference Matrix

Paragraph	Title	Verification Method					
		N/R	PQT				ATP
			Inspect	Analysis	Demo	Test	
3.2.2.2	Mechanical Safety		X	X			
3.4	Logistics			X			

5.0 PREPARATION FOR DELIVERY

Each module is packaged for shipment and the package marked in accordance with the requirements of the contract under which the module is ordered.

6.0 BASELINE CONFIGURATION

6.1 Equipment

Table 13 - Equipment List

Device	Manufacturer	Part Number	Description	Quantity
Voice Switch	REDCOM	SA9079-025	Small Voice Switch BAM Light Version	1
Software	REDCOM	6X-TDC	Version 6X-TDC	1
Software	REDCOM	AUTOVON	MLPP & Prioirty Feature	1
Software	REDCOM	Toll Restriction	Toll Restriction Feature	1
Software	REDCOM	CO MF	MF Signaling Feature	1
Software	REDCOM	CUSTOM	ROSMI Custom Feature	1
Software	REDCOM	HOST	Host Computer Control (CTI) Feature	1
Software	REDCOM	PRS	Print Site Records Feature	1
Software	REDCOM	BASIC	Basic Program Language	1
Software	REDCOM	CHAIN_C	Conference Chaining	1
Software	REDCOM	IGATE	Law Conversion	1
Software	REDCOM	BOOK	Phone Book Generation	1
Software	REDCOM	CLUSTER	Multi-cluster Capability	1
Software	REDCOM	EXPORT	International Feature Capability	1
Software	REDCOM	ISDN	ISDN Feature Capability	1
Software	REDCOM	TBS	Additional REDCOM Featuresets	1
MSU Controller	REDCOM	TK0640-017	Supervisor/Controller Board Set	1
ETSI Card	REDCOM	TBD	ETSI Board Set	1
Ring Generator	REDCOM	TK0060-005	Ring Generator	1
Memory	REDCOM	MA0638-001	PCMCIA SRAM 1 MEG	1
Trunk Card	REDCOM	TBD	Trunk DS1 Board Set	1
Message T ransceiver IF	REDCOM	TK0461-101	MTI User Config	1
Clock Synchronizer	REDCOM	TK0473-163	Universal Clock Sync	1
Trunk Card	REDCOM	TK0331-101	LS/GS Ringdown Trunk Board	1
Line Card	REDCOM	TK0653-103	Extended Line Board	8
Cable	REDCOM	SH9079-020	Cannon Cable “A1”	1
Cable	REDCOM	SH9079-120	Cannon Cable “A2”	1
Cable	REDCOM	CA9079-040	Cannon Cable “B”	1
Cable	REDCOM	SC9079-048	Cannon Cable “C1”	1

Table 13 - Equipment List

Device	Manufacturer	Part Number	Description	Quantity
Cable	REDCOM	SC9079-148	Cannon Cable “C2”	1
Cable	REDCOM	CA9079-140	Cannon Cable “D”	1
Cable	REDCOM	CA9079-T0B	Cannon Cable “F”	1
Cable	REDCOM	CA9079-T3A	Cannon Cable Terminator “E1”	1
Cable	REDCOM	CA9079-T3B	Cannon Cable Terminator “E2”	1
Cable	REDCOM	CA9079-T5B	Cannon Cable Terminator “G1”	1
Server	TBD	TBD	Server	2
Software	Microsoft		Windows 2003 Server	2
Software	Microsoft		Windows 2003 Server Media Kit	2
Software	Microsoft		Exchanage 2003	1
Software	Microsoft		Exchange 2003 Media Kit	1
Software	Microsoft		ExchangeClient License	50
Software	Symantec	ESC/NI4	Symantec Anti-Virus Edition Version 8.1	1
Software	Symantec	ESC/NI4	Symantec Anti-Virus Client	2
Software	Symantec	ESC/NI4	Symantec Mail Security for Exchange	1
Software	Kiwi	ESC/NI4	Kiwi Cat Tools v2.0.4	1
Software	Adobe	ESC/NI4	Acrobat Reader	2
Software		ESC/NI4	Password Policy Enfrcer	1
Monitor/Keyboard	Compaq	TFT5600RKM	Rack-mounted Monitor/ Keyboard	1
Trackball	Compaq	Spaceball 4000	Trackball	1
Cable Kit	Compaq	169989-001	KVM Cable Extension Kit	1
KVM Switch	Raritan	TBD	KVM Switch	1
Switch	Cisco	WS-3560-48PS-S	Ethernet Switch	1
Router	Cisco	Cisco 3725	10/100 Ethernet Router	1
Flash Memory	Cisco	MEM3725-32U128CF	32 to 128MB Flash Memory Factory Upgrade for CIsco 3725	1
DRAM	Cisco	MEM3725-128D	256MB DRAM Factory Upgrade for Cisco 3725	2
Software	Cisco	S374VP-12215T	Cisco 3725 Software v12.20(15)T2	1

Table 13 - Equipment List

Device	Manufacturer	Part Number	Description	Quantity
Serial Card	Cisco	NM-4T	4 Port Synchronous Serial Network Module	1
Conditioner	Marway	411355	Power Conditioner	1
Case	ECS	11722	13 U Transit Case	1
Cable (P01)	TBD	TBD	EIA-232 control cable with DB-9F to DB-9M connectors for PC Com Port	1
Cable (W021)	TBD	TBD	Power Cord	1
Cable (W015-W017))	TBD	TBD	Cable Assembly	3
Cable (W001)	TBD	TBD	Cable Assembly	1
Cable (W002)	TBD	TBD	Cable Assembly	1
Cable (W011))	TBD	TBD	Cable Assembly	1
Cable (W012)	TBD	TBD	Cable Assembly	1
Cable (W019)	TBD	TBD	Cable Assembly	1
Cable (W007)	TBD	TBD	Cable Assembly	1
Cable (W010)	TBD	TBD	Cable Assembly	1
Cable (W023)	TBD	TBD	Cable Assembly	1
Cable (W024)	TBD	TBD	Cable Assembly	1
Cable (W014)	TBD	TBD	Cable Assembly	1
Cable (W018)	TBD	TBD	Cable Assembly	1
Cable (P04)	TBD	TBD	Cable Assembly	1
Cable (P02)	TBD	TBD	Cable Assembly	2
Cable (P03)	TBD	TBD	Cable Assembly	3
Cable (W022)	Specialized Power Coard	TBD	Power Cable	1
Cable (W003-W006)	TBD	TBD	Cable Assembly, Multiconductor LFH to DB25F	4
Cable (W008-W009)	TBD	TBD	TACLANE 100BaweFX ST to MT-RJ Fiber Optic Cable	2
Cable	REDCOM	SC9079-A20	Cannon Cabale	2
Breakout Box	Black Box	31525	Breakout Box	2
Cable, Power	Panel Components	86557000	Cable, Power	1
Cable (W025, W026)	TBD	TBD	Cable Assembly	2
Cable (W027)	TBD	TBD	Cable Assembly	1

6.2 Elevation Drawings

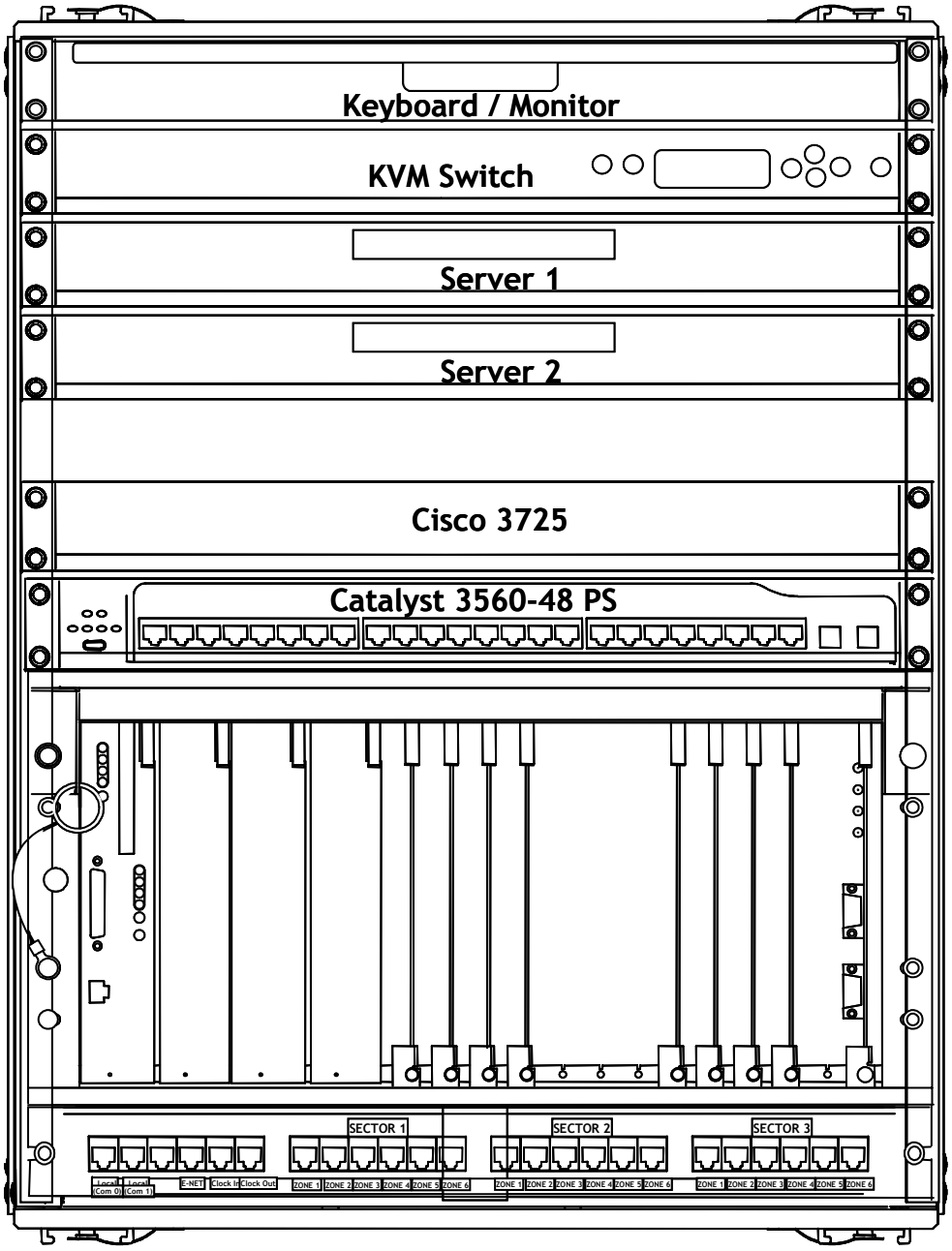

Figure 2 - Front Elevation

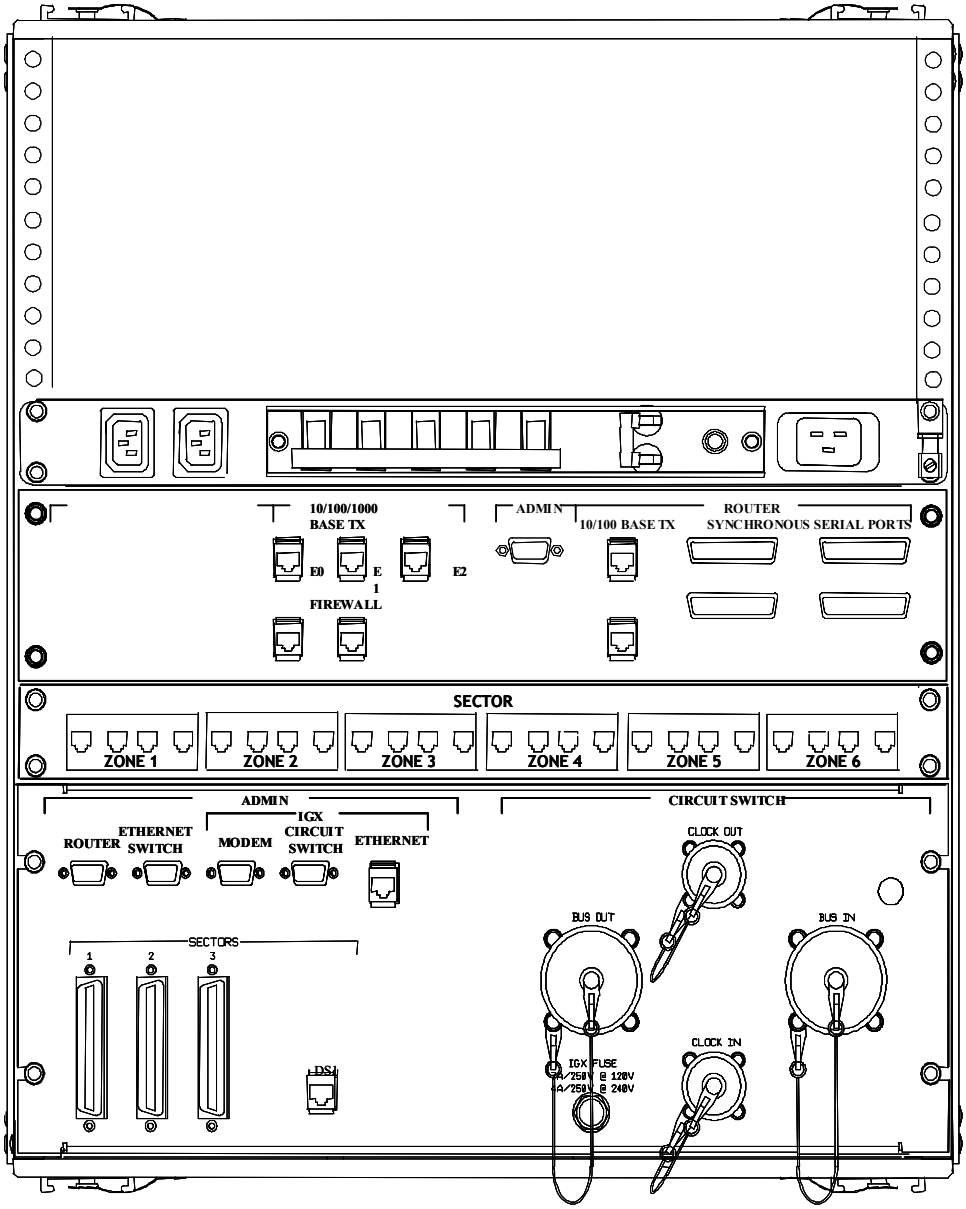

Figure 3 - Rear Elevation

6.3 Cable Diagrams

Table 14 - Cable Diagrams

Wire Number	Part Number	Manufacturer	Description
W001,W002,W008, W009, W011, W012, W019	TBD	TBD	10/100BaseTX
W003-W006	TBD	TBD	Router Synchronous
W007	TBD	TBD	Router Admin
W010	TBD	TBD	Ethernet Switch Admin
W014	TBD	TBD	PBX Switch (Admin, modem, Enet, DS1, Clock In, Clock Out)
W015-W017	TBD	TBD	Remote Voice Sectors 1-3
W018	TBD	TBD	RJ11 Splitter
W021	TBD	TBD	Server Power
W022	TBD	TBD	Ethernet Switch/Router Power Y-type
W023	TBD	TBD	PBX Switch/Monitor Power
W024	TBD	TBD	Admin Y-type
W025, W026	TBD	TBD	KVM to Servers
W027	TBD	TBD	KVM to I/O Device
P01	TBD	TBD	Admin (Stored in Pouch)
P04	TBD	TBD	Jumper (Stored in Pouch)
P02	TBD	TBD	Jumper (Stored in Pouch - Qty 2)
P03	TBD	TBD	Jumper (Stored in Pouch - Qty 2)
Power	86557000	Panel Components	Power (Stored in Pouch - Qty 1)

Voice / NIPRNET Module Cables

Cables W001,W002, W008, W009, W011, W012, W013, W019 (TBSL) Pin Assignments
10/100 BaseTX

RJ45 (SOLID) Plug AMP 5-557315-3 10/100 Ethernet Port	Signal	Direction	RJ45 (SOLID) PLUG AMP 5-557315-3 Distribution Frame Port
1	Tx (+)	--→	1
2	Tx (-)	--→	2
3	Rx (+)	←--	3
4	N/C		4
5	N/C		5
6	Rx (-)	←--	6
7	N/C		7
8	N/C		8

Cables W003-W006 (TBSL) Pin Assignments
Router Synchronous

DB60M Plug Molex 70929-2000 C3620 NM-4T Serial Port 0-3	Signal	Direction	DB25F Receptacle AMP 747913-2 I/O DISTR FR
J1-11	TxD+	→	2
J1-12	TxD-	→	14
J1-28	RxD+	←	3
J1-27	RxD-	←	16
J1-9	RTS+	→	4
J1-10	RTS-	→	19
J1-1	CTS+	←	5
J1-2	CTS-	←	13
J1-3	DSR+	←	6
J1-4	DSR-	←	22
J1-46	Shield_GND	Shorted to J1-47	1
J1-47	MODE_2	Shorted to J1-46	-
J1-48	GND	Shorted to J1-49	-
J1-49	MODE_1	Shorted to J1-48	-
J1-5	DCD+	←	8
J1-6	DCD-	←	10
J1-24	TxC+	←	15
J1-23	TxC-	←	12
J1-26	RxC+	←	17
J1-25	RxC-	←	9
J1-44	LL	→	18
J1-45	Circuit_ GND	-	7
J1-7	DTR+	→	20
J1-8	DTR-	→	23
J1-13	TxCE+	→	24
J1-14	TxCE-	→	11
J1-51	GND	Shorted to J1-52	-
J1-52	MODE_DCE	Shorted to J1-51	-

Cable W007 (TBSL) Pin Assignments
Router Admin

RJ45 (SOLID) Plug AMP 5-557315-3 Router Console Console Port		Signal	Direction		DB09F Receptacle AMP 745491-2 Voice DF Voice DF
	1	RTS	--→	8	
	2	DTR	---->	6	
	3	TxD	---->	2	
	4	GND		5	
	5	GND		5	
	6	RxD	<----	3	
	7	DSR	<----	4	
	8	CTS	<----	7	

Cable W010 (TBSL) Pin Assignments
Ethernet Switch Admin

RJ45 (SOLID) Plug AMP 5-557315-3 3560-48PS Console Console Port		Signal	Direction		DB09F Receptacle AMP 745491-2 I/O DF I/O DF
	1	RTS	---->	8	
	2	DTR	---->	6	
	3	TxD	---->	2	
	4	GND		5	
	5	GND		5	
	6	RxD	<----	3	
	7	DSR	<----	4	
	8	CTS	<----	7	

Cable W014 (TBSL) Pin Assignments
PBX Switch (Admin, Modem, Enet, DS1, Clock In, Clock Out)

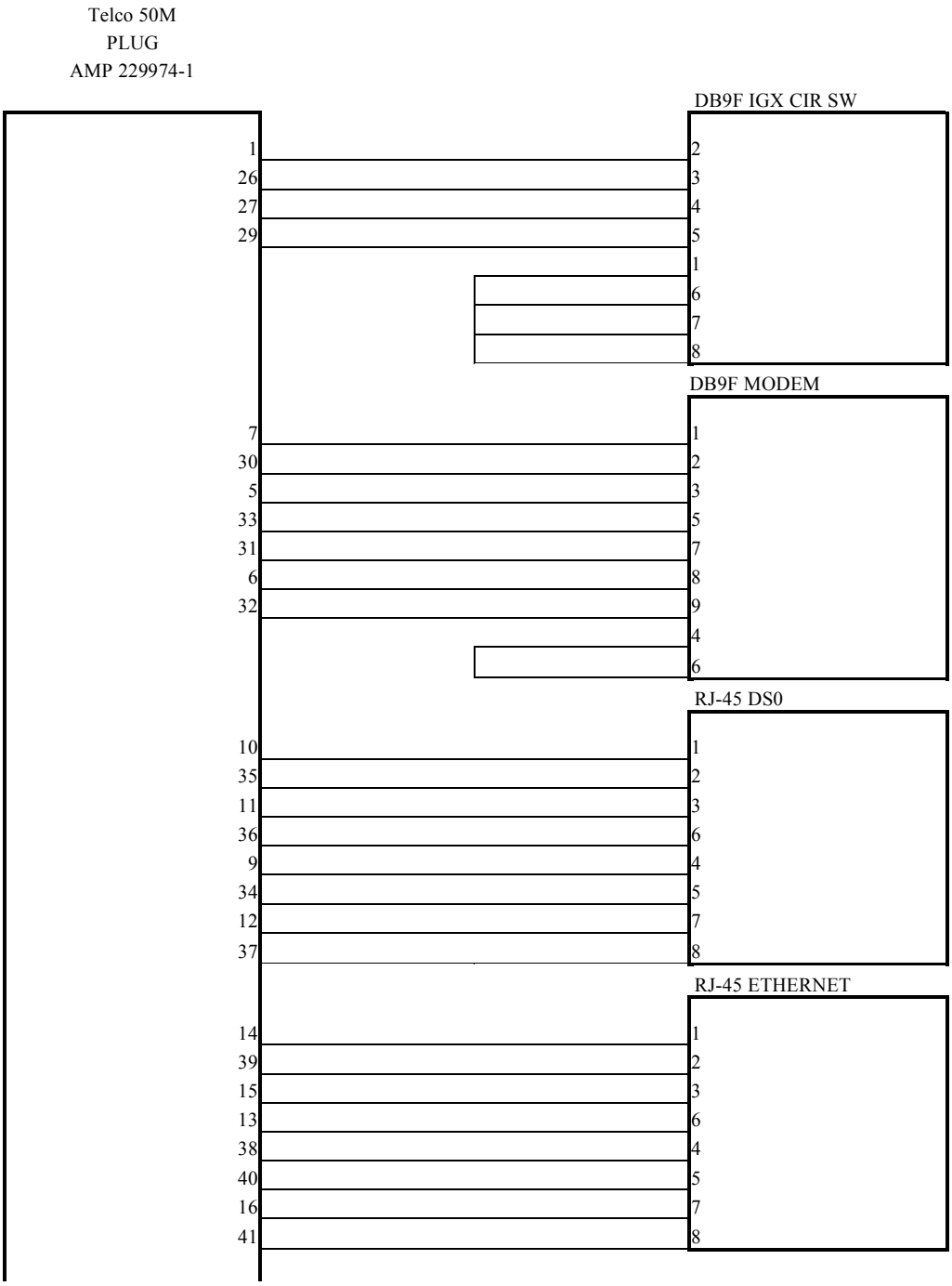

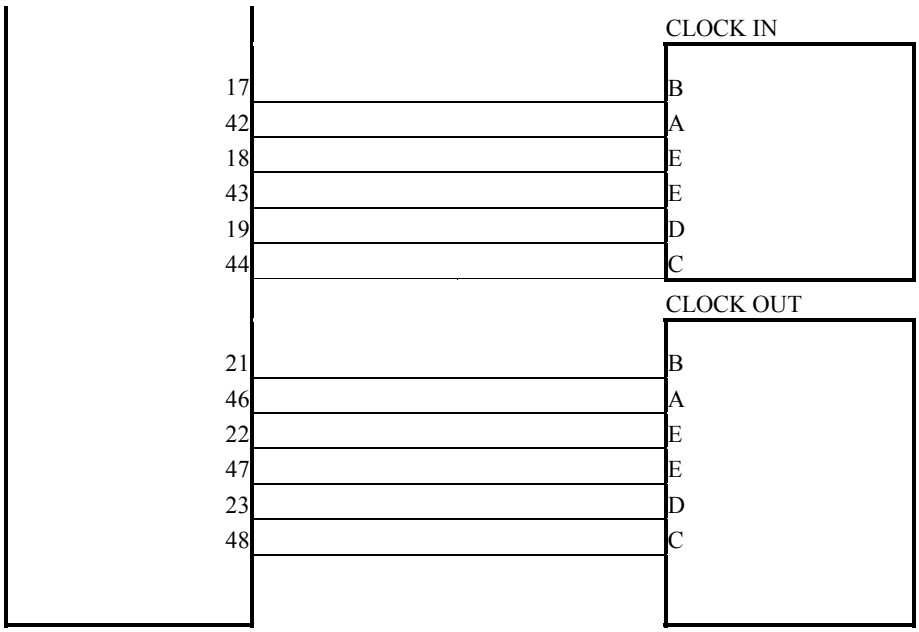
CLOCK IN
17
42
18
43
19
44
B
A
E
E
D
C
CLOCK OUT
21
46
22
47
23
48
B
A
E
E
D
C

Cable W015-W017 (TBSL) Pin Assignments

Remote Voice Sectors 1-3

DB50 (FEMALE) RECEPTACLE AMP 205211-2 Zone Tray	Signal	Direction	Telco 50M PLUG AMP 229974-1 I/O DF
1	RING	<---->	1
26	TIP	<---->	26
2	RING	<---->	3
27	TIP	<---->	28
3	RING	<---->	2
28	TIP	<---->	27
4	RING	<---->	4
29	TIP	<---->	29
5	RING	<---->	5
30	TIP	<---->	30
6	RING	<---->	7
31	TIP	<---->	32
7	RING	<---->	6
32	TIP	<---->	31
8	RING	<---->	8
33	TIP	<---->	33
9	RING	<---->	9
34	TIP	<---->	34
10	RING	<---->	11
35	TIP	<---->	36
11	RING	<---->	10
36	TIP	<---->	35
12	RING	<---->	12
37	TIP	<---->	37
13	RING	<---->	13
38	TIP	<---->	38
14	RING	<---->	15
39	TIP	<---->	40
15	RING	<---->	14
40	TIP	<---->	39
16	RING	<---->	16
41	TIP	<---->	41
17	RING	<---->	17
42	TIP	<---->	42
18	RING	<---->	19
43	TIP	<---->	44
19	RING	<---->	18
44	TIP	<---->	43

20	Ring	20
45	Tip	45
21	Ring	21
46	Tip	46
22	Ring	23
47	Tip	48
23	Ring	22
48	Tip	47
24	Ring	24
49	Tip	49
25	NC	25
50	NC	50

Cable W018 (TBSL) Pin Assignments
RJ11 Splitter

DB50 (FEMALE) RECEPTACLE AMP 205211-2 Zone Tray	Signal	Direction	Telco 50M PLUG AMP 229974-1 I/O DF
1	RING	<---->	1
26	TIP	<---->	26
2	RING	<---->	2
27	TIP	<---->	27
.	RING	<---->	.
.	TIP	<---->	.
23	RING	<---->	23
48	TIP	<---->	48
24	RING	<---->	24
49	TIP	<---->	49
25	N/C		25
50	N/C		50

Cable W021 (TBSL) Pin Assignments
Server Power

IEC-320 C-20 RECEPTACLE Power				IEC-320 PLUG Power Conditioner Power
		Signal	Direction	
	1	Line	----	1
	2	Neutral	----	2
	3	GND	----	3

Cable W022 (TBSL) Pin Assignments
Ethernet Switch/Router Power Y-type

IEC-320/C-13
RECEPTACLE
EthernetSwitch/Router
Power

IEC-320/C-14
PLUG
Power Conditioner-A5
Power

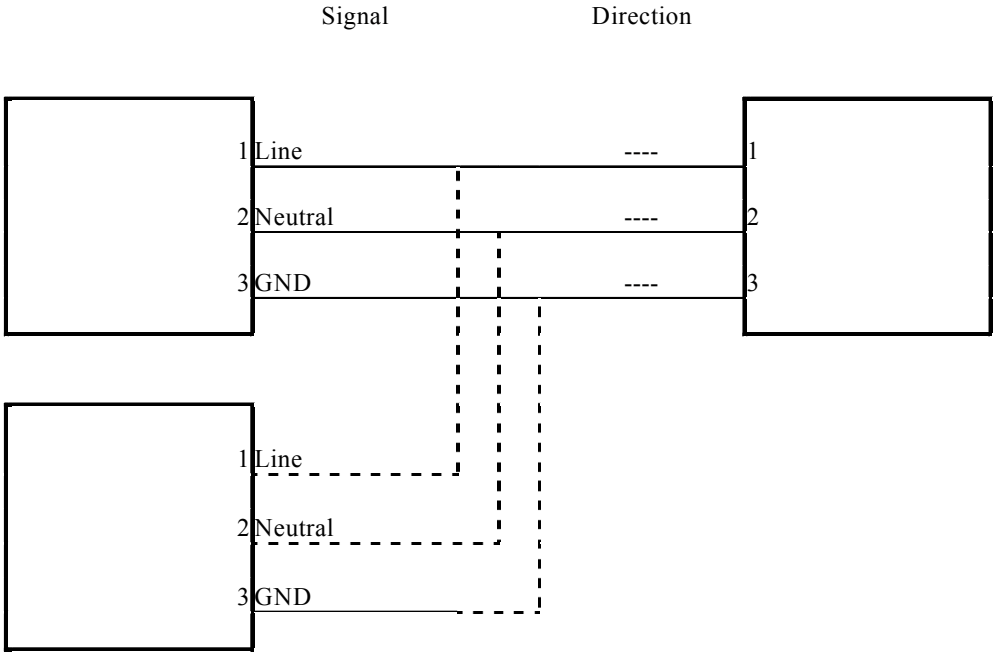

Cable W023 (TBSL) Pin Assignments
PBX Switch/Monitor Power

IEC-320/C-13 RECEPTACLE PBXSwitch/Monitor Power			IEC-320/C-14 PLUG Power Conditioner-A5 Power
	Signal	Direction	
1	Line	Fuse	1
2	Neutral	----	2
3	GND	----	3

Cable W024 (TBSL) Pin Assignments
Admin Y-type

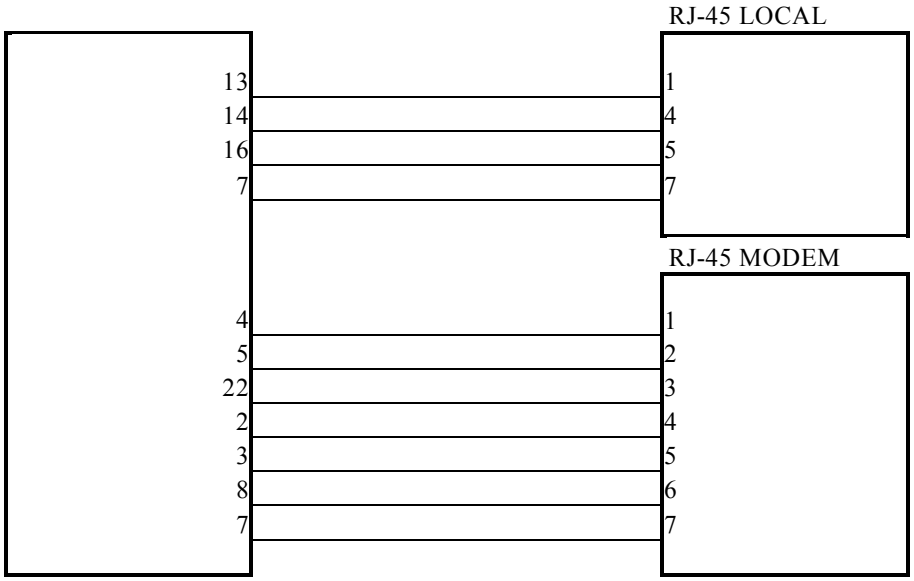

Cable W025, W026 (TBSL) Pin Assignments
KVM Switch to Servers

TBS

Cable W027 (TBSL) Pin Assignments
KVM to Keyboard Monitor

TBS

Cable (P01) (TBSL) Pin Assignments
Admin (Stored in Pouch)

DB9F Receptacle AMP 745491-2 Laptop COM port Terminal DTE		Signal	Direction		DB9M Plug AMP 745906-1 I/O DF Various Admin
	2	RD	<----	2	
	3	TD	---->	3	
	4	DTR	---->	4	
	5	GND	-----	5	
	6	DSR	<----	6	
	7	RTS	---->	7	
	8	CTS	<----	8	

Cable (P02) (TBSL) Pin Assignments

Jumper (Stored in Pouch - Qty 2)

RJ45 (SOLID) Plug AMP 5-557315-3 10/100BaseTX		Signal	Direction		RJ45 (SOLID) PLUG AMP 5-557315-3
	1	Tx (+)	---->	1	
	2	Tx (-)	---->	2	
	3	Rx (+)	<----	3	
	4	N/C		4	
	5	N/C		5	
	6	Rx (-)	<----	6	
	7	N/C		7	
	8	N/C		8	

Cable (P03) (TBSL) Pin Assignments
Jumper (Stored in Pouch - Qty 3)

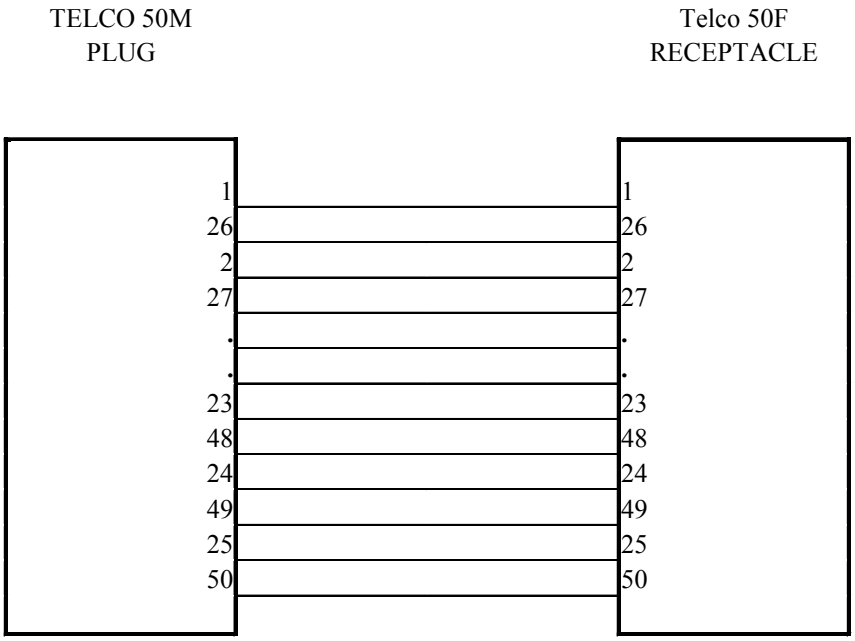

P4 Cable (TBSL) Pin Assignments
Jumper (Stored in Pouch)

RJ45 Plug AMP 5-557315-3 PBX DS1	Signal	Direction	DB015M Plug AMP P-MUX PRC
3	TTIP	---->	1
6	TRING	---->	9
5	RTIP	<----	3
4	RRING	<----	11

6.4 Interconnect Diagrams

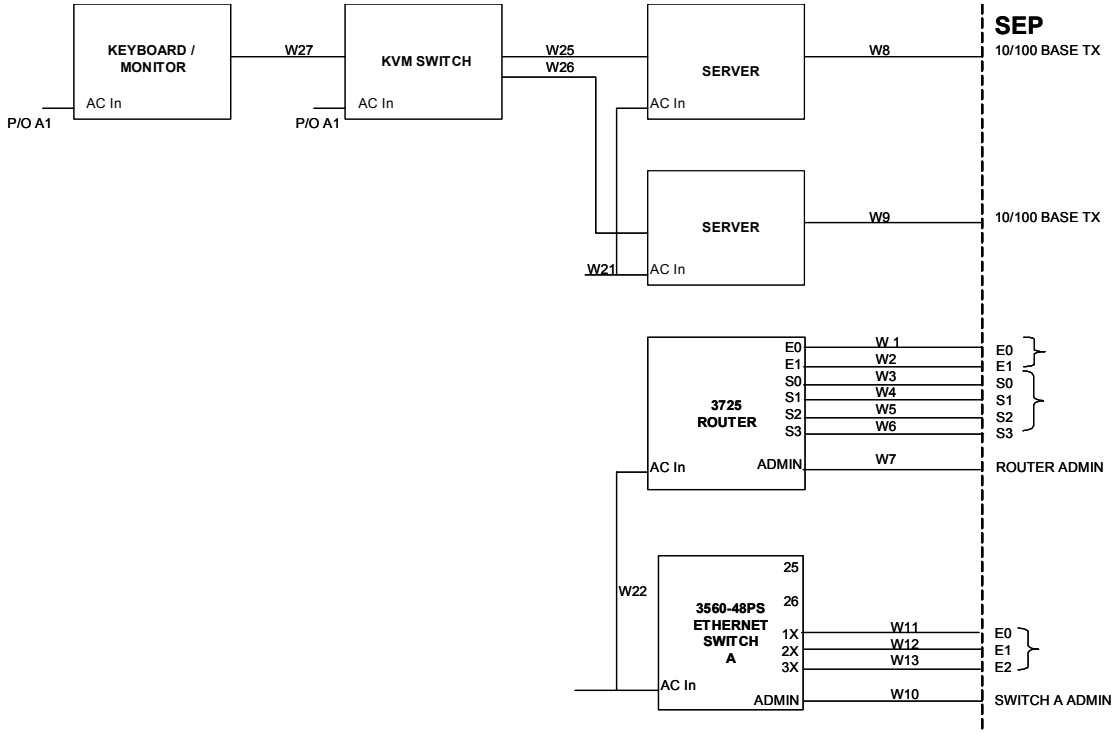

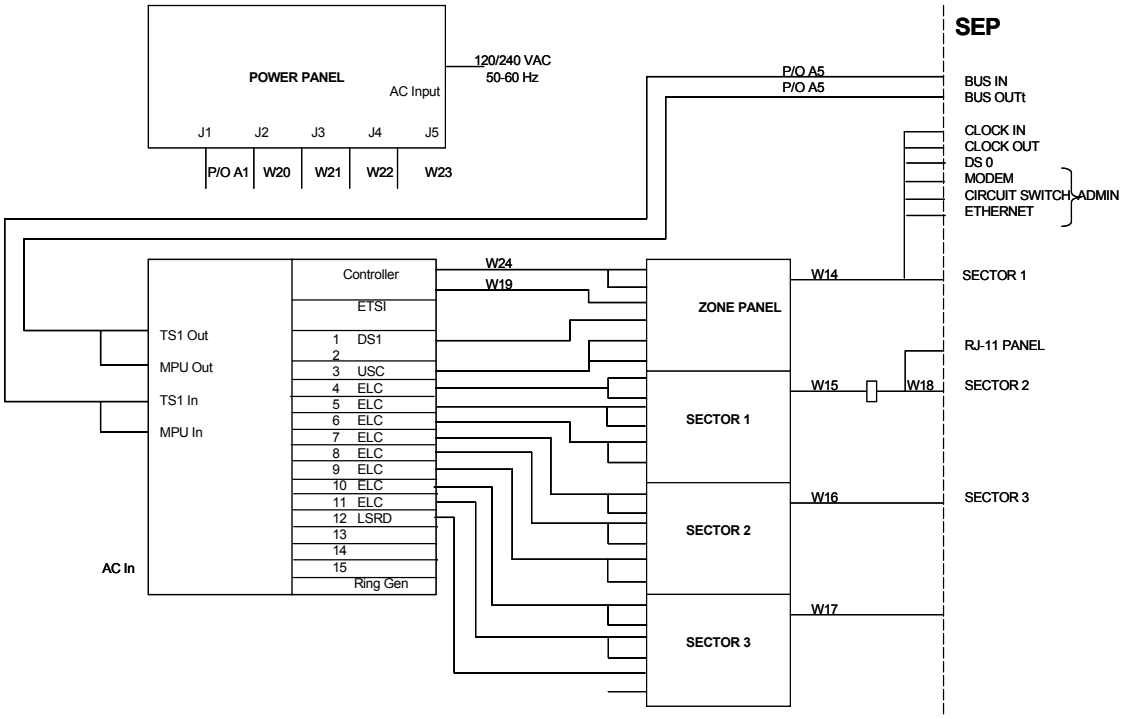
SEP
POWER PANEL
AC Input
120/240 VAC
50-60 Hz
J1
J2
J3
J4
J5
P/O A1
W20
W21
W22
W23
P/O A5
P/O A5
BUS IN
BUS OUTt
CLOCK IN
CLOCK OUT
DS 0
MODEM
CIRCUIT SWITCH
ETHERNET
ADMIN
Controller
ETSI
1 DS1
2
3 USC
4 ELC
5 ELC
6 ELC
7 ELC
8 ELC
9 ELC
10 ELC
11 ELC
12 LSRD
13
14
15
Ring Gen
TS1 Out
MPU Out
TS1 In
MPU In
AC In
W24
W19
ZONE PANEL
SECTOR 1
SECTOR 2
SECTOR 3
W14
W15
W18
W16
W17
SECTOR 1
RJ-11 PANEL
SECTOR 2
SECTOR 3