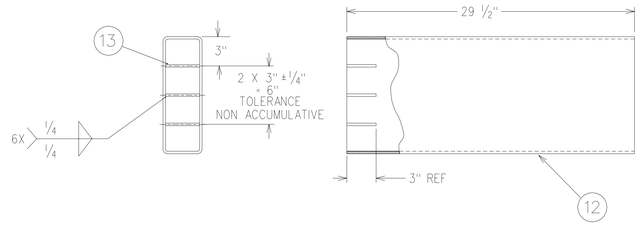

2 REQUIRED

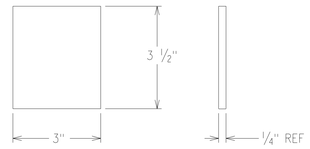

ITEM 13
SCALE 1/2
6 REQUIRED

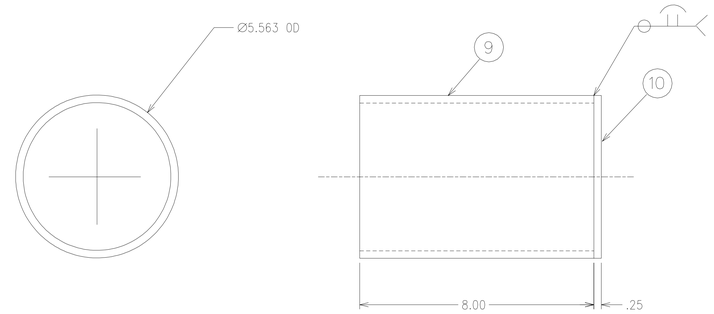

POCKET
SCALE 1/2
4 REQUIRED

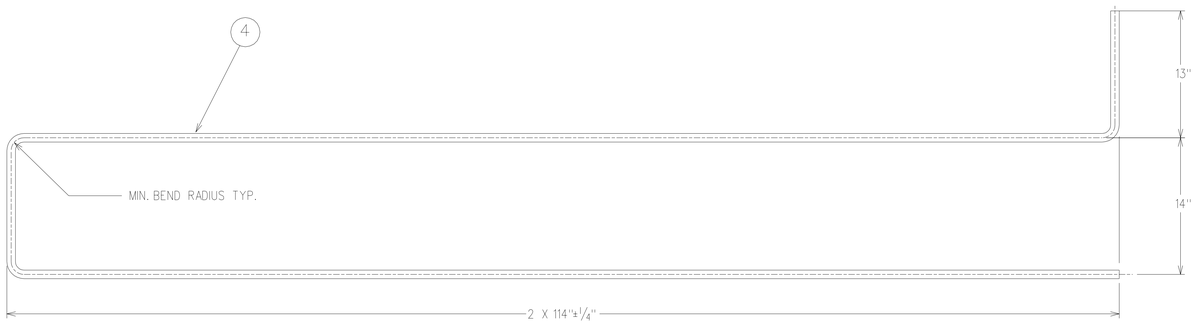

4 REQUIRED

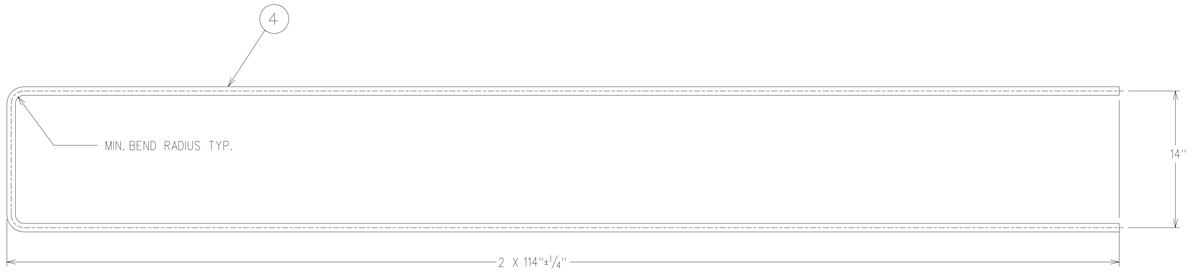

10 REQUIRED

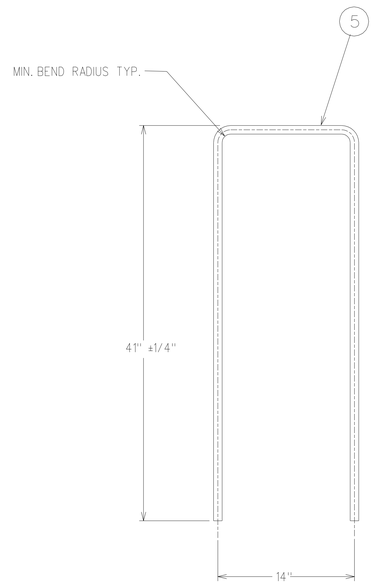

40 REQUIRED

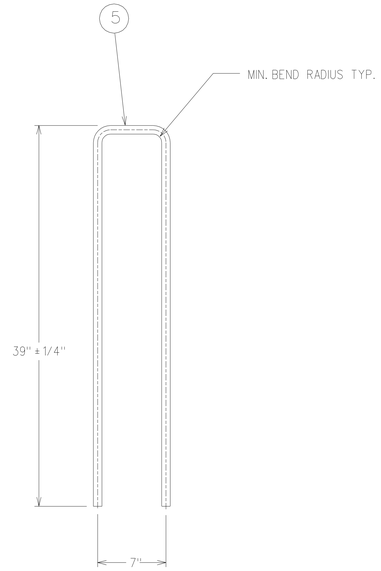

STIRRUP BAR
1 REQUIRED

ITEM 15

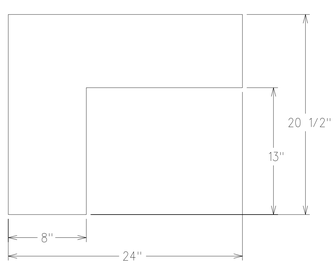

PART "A"

PART "B"

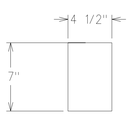

PART "C"

PART "D"

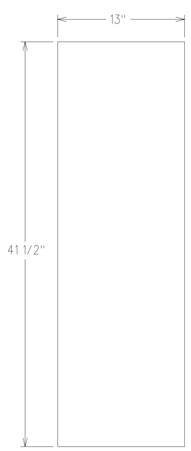

PART "E"

DETAILS FOR ITEM 3

DRAWING NUMBER R68658		
DRAWING CLASSIFICATION UNCLASSIFIED		
SIZE E	CAGEC 14213	SCALE 1/6
	ISSUE A	SHEET 3 OF 4
STATUS SA-REL-05/14/02		