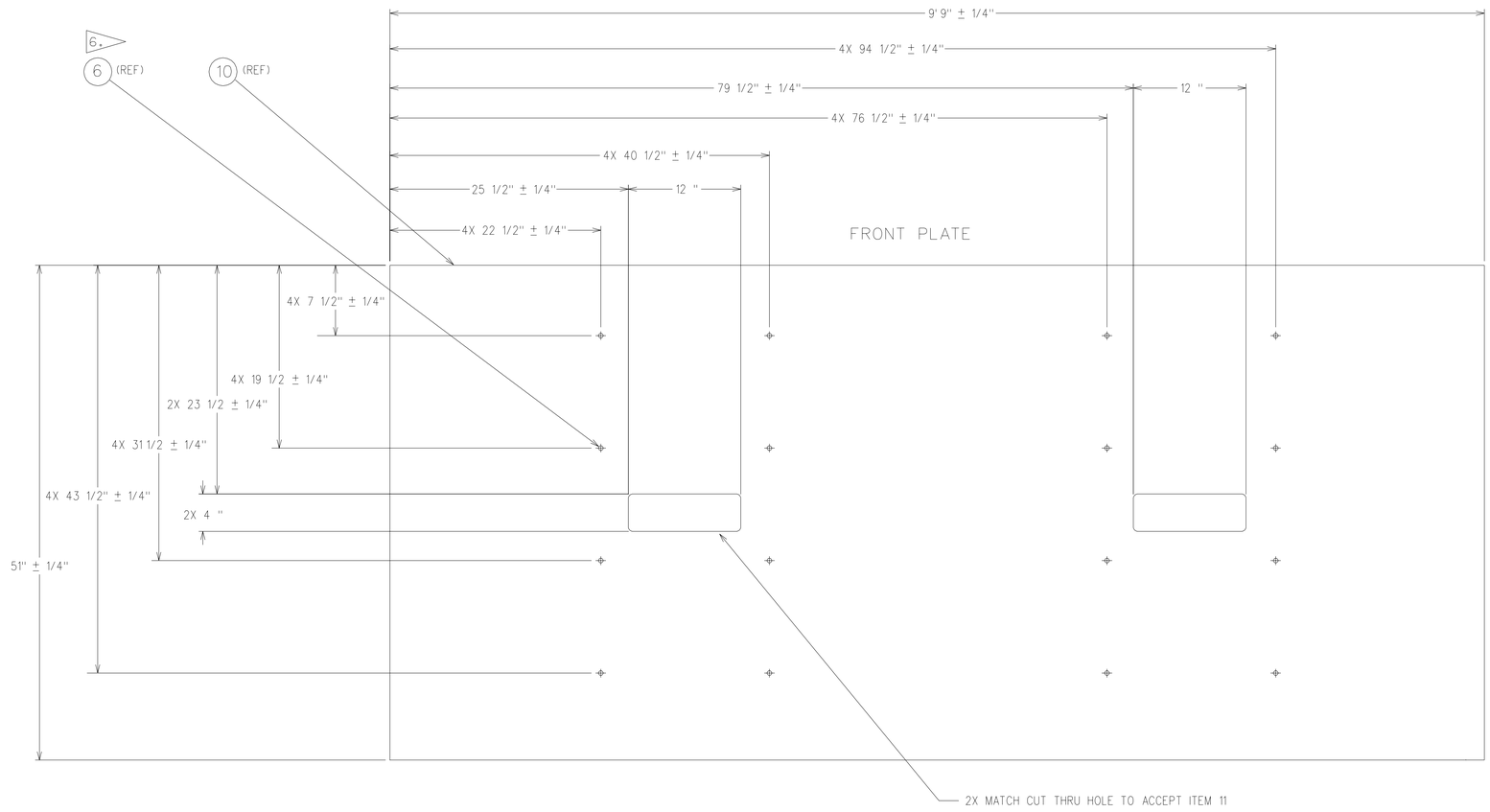

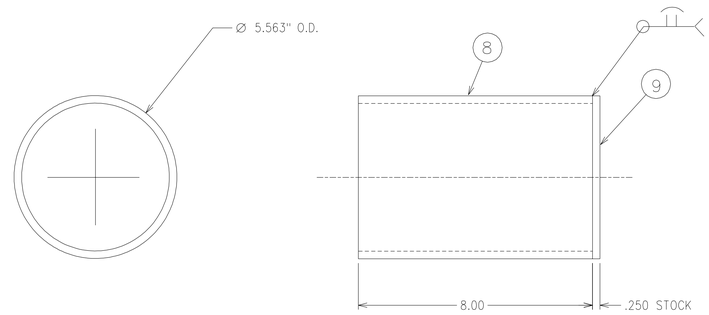

POCKET
SCALE 1/2

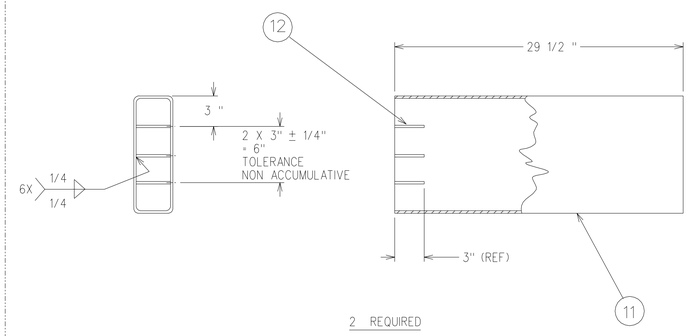

2 REQUIRED

ROD LOCATION					
ROD NO.	"X"± 1/4 DIM.	"Y"±1/4 DIM.	ROD NO.	"X"±1/4 DIM.	"Y"±1/4 DIM.
1	3 3/4"	11 1/8	43	58 1/2"	45 11/16
2	3 3/4"	21 5/8	44	66 3/4"	3 5/8
3	3 3/4"	29 1/4	45	66 3/4"	11 1/8
4	3 3/4"	40 3/16	46	66 3/4"	21 5/8
5	8 1/4"	5 1/8	47	66 3/4"	29 1/4
6	8 1/4"	17 3/16	48	66 3/4"	40 3/16
7	8 1/4"	33 3/16	49	66 3/4"	47 3/16
8	14 3/8"	11 1/8	50	72 3/4"	5 1/8
9	14 3/8"	21 5/8	51	72 3/4"	17 3/16
10	14 3/8"	29 1/4	52	72 3/4"	33 3/16
11	14 3/8"	40 3/16	53	72 3/4"	45 11/16
12	20 3/8"	5 1/8	54	78 3/4"	3 5/8
13	20 3/8"	17 3/16	55	78 3/4"	11 1/8
14	20 3/8"	33 3/16	56	78 3/4"	21 5/8
15	20 3/8"	45 11/16	57	78 3/4"	29 1/4
16	26 3/8"	3 5/8	58	78 3/4"	40 3/16
17	26 3/8"	11 1/8	59	78 3/4"	47 3/16
18	26 3/8"	21 5/8	60	84 3/4"	5 1/8
19	26 3/8"	29 1/4	61	84 3/4"	17 3/16
20	26 3/8"	47 3/16	62	84 3/4"	33 3/16
21	32 1/4"	5 1/8	63	84 3/4"	45 11/16
22	32 1/4"	17 3/16	64	90 3/4"	3 5/8
23	32 1/4"	33 3/16	65	90 3/4"	11 1/8
24	38 3/8"	3 5/8	66	90 3/4"	21 5/8
25	38 3/8"	11 1/8	67	90 3/4"	29 1/4
26	38 3/8"	21 5/8	68	90 3/4"	47 3/16
27	38 3/8"	29 1/4	69	96 3/4"	5 1/8
28	38 3/8"	40 3/16	70	96 3/4"	17 3/16
29	38 3/8"	47 3/16	71	96 3/4"	33 3/16
30	44 3/8"	5 1/8	72	96 3/4"	45 11/16
31	44 3/8"	17 3/16	73	102 3/4"	11 1/8
32	44 3/8"	33 3/16	74	102 3/4"	21 5/8
33	44 3/8"	45 11/16	75	102 3/4"	29 1/4
34	50 3/8"	3 5/8	76	102 3/4"	40 3/16
35	50 3/8"	11 1/8	77	108 3/4"	5 1/8
36	50 3/8"	21 5/8	78	108 3/4"	17 3/16
37	50 3/8"	29 1/4	79	108 3/4"	33 3/16
38	50 3/8"	40 3/16	80	113 1/4"	11 1/8
39	50 3/8"	47 3/16	81	113 1/4"	21 5/8
40	58 1/2"	5 1/8	82	113 1/4"	29 1/4
41	58 1/2"	17 3/16	83	113 1/4"	40 3/16
42	58 1/2"	33 3/16	84	90 3/4"	40 3/16
			85	26 3/8"	40 3/16

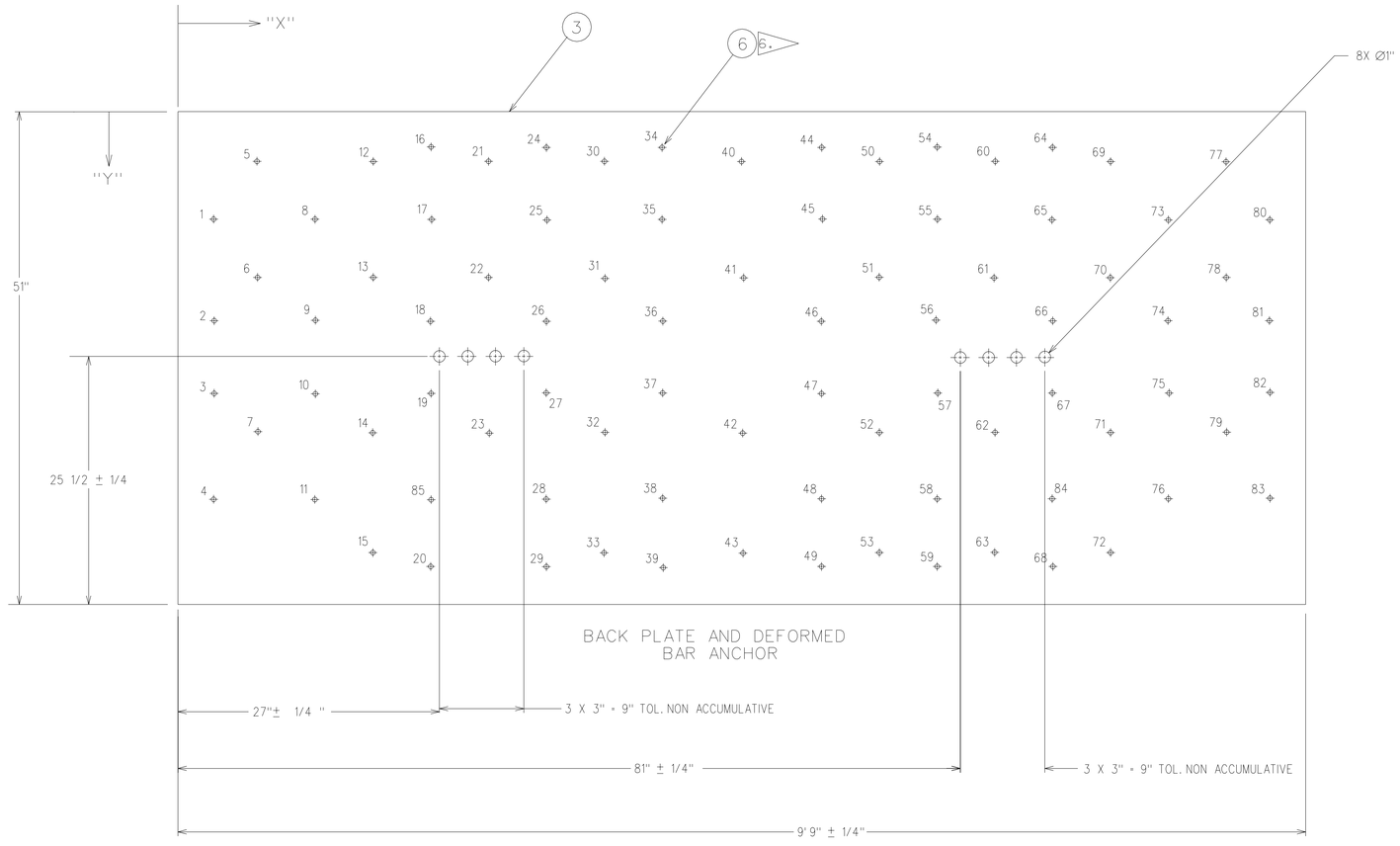

DRAWING NUMBER R68318			
DRAWING CLASSIFICATION UNCLASSIFIED			
SIZE E	CAGEC 14213	SCALE 1/6	
	ISSUE A	SHEET 3 OF 3	
STATUS SA-REL-04/11/02			