DESIGN AGENCY PART NUMBER	REVISIONS						
	ISS	SHEET ZONE	PREPARED BY	DESCRIPTION	DATE	CHKR	APVD
SEE TABULATION	A		C. MATTHEWS, 2996/ D. SWAHLAN, 5832				DS

11. THE BASE OF ITEM 5 MAY BE BENT SLIGHTLY TO ALLOW PROPER PLACEMENT OF ITEM 8.

12. APPROX. LOCATION OF PAINTED 4" HIGH NUMBER PAINT BLACK. PAINT FINISHED WEIGHT OF BLOCK ROUNDED TO THE NEAREST 100 #.

13. ALL PRE-CAST SURFACES SHALL BE TREATED WITH AN ACRYLIC SEALER.

14. WIRE TIE ALL REBAR LAYERS AND WIRE TIE DEFORMED BAR RODS TO REBAR LAYERS.

15. FRONT AND REAR STEEL PLATES ITEMS (3 AND 10) SHALL BE FLAT AND PARALLEL WITHIN + OR - 1/4 IN. FROM THEORETICAL PLANE.

16. AFTER ALL WELDING AND PAINTING IS COMPLETE, FILL VOIDS BETWEEN PLATES (ITEM 12) WITH POLYURETHANE FOAM (ITEM 13).

FOAM IS:

"GREAT STUFF", MINIMAL EXPANDING
DOW CHEMICAL CO.
1881 WEST OAK PARKWAY
MARIETA, GA. 30062

MAY BE PURCHASED AT HOME DEPOT

17. LIGHTLY SANDBLAST ALL EXPOSED STEEL SURFACES BEFORE CLEANING PER TT-C-490D. PRIME STEEL SURFACES PER MIL-PRF-23377, PRIMER COATINGS, EPOXY, HIGH-SOLIDS. TOPCOAT OF EPOXY PAINT PER MIL-PRF-22750F, COATING, EPOXY, HIGH-SOLIDS. COLOR: GRAY LUSTERLESS (36495) PER FED-STD-595. PAINTING ITEMS 8, 9, 11 AND 12 AFTER WELDING, BUT PRIOR TO FINIAL BLOCK ASSEMBLY IS OPTIONAL.

18. ITEM 14 IS USED ON -200 AND -300 ONLY, WELD TO ITEMS 4, 5 AND 11 WHERE CONVIENT.

6. WELD DEFORMED BAR ANCHORS (ITEM 6) TO PLATE (ITEM 3 AND 10): PER MANUFACTURERS INSTRUCTIONS: WELD HEADED ANCHORS (ITEM 7) TO ANGLES (ITEM 2).

7. WELD AND INSPECT PER 9912119, CLASS II, USING E70XX ELECTRODES PER AWS A5.5-81 OR E70S-X ELECTRODES OR RODS PER AWS A5.18-79.

8. DIMENSIONAL TOLERANCES SHALL BE AS FOLLOWS: (UNLESS OTHERWISE NOTED)
   A. LINEAR DIMENSIONS ±1/8".
   B. OUT OF SQUARE ±1/8".
   C. ALL SURFACES SHALL BE FLAT WITHIN ±1/8" FROM THEORETICAL PLANE.

9. PROVIDE AT LEAST 1 1/2" COVER BY CONCRETE OF REINFORCING STEEL.

10. MINIMUM CONCRETE REQUIREMENTS:

4000 PSI @ 28 DAYS, 4.5 - 6% ENTRAINED AIR, CURED CONCRETE SHALL NOT EXCEED 142 LB. PER CU. FOOT (EXCLUSIVE OF STEEL REINFORCING). CUSTOMER MAY REQUEST TYPE III, HIGH EARLY STRENGTH CEMENT.

NOTES:

1. STEEL EDGES AND SURFACES TO BE GROUND OR PLACED FLUSH TO 1/16 INCH BELOW SURROUNDING CONCRETE SURFACES.

2. DO NOT CHAMFER CONCRETE EDGES, LEAVE SHARP.

3. MANUFACTURED BY NELSON STUD WELDING DIV., TRW INC. 7900 WEST RIDGE, P.O. BOX 4019, ELYRIA, OH 44036.

4. TWO ANCHORS (ITEM 7) PER ANGLE, LOCATED EQUALLY SPACED WITHIN RUN.

5. TACK WELD 100 RANDOM INTERSECTIONS OF ITEMS 4, 5, AND 6.

TABULATION		
PART NO.	CLASSIFICATION	ITEM 14
R68318-100	UNCLASSIFIED	OMIT
R68318-200	UNCLASSIFIED	1 REQ.
R68318-300	UNCLASSIFIED	2 REQ.

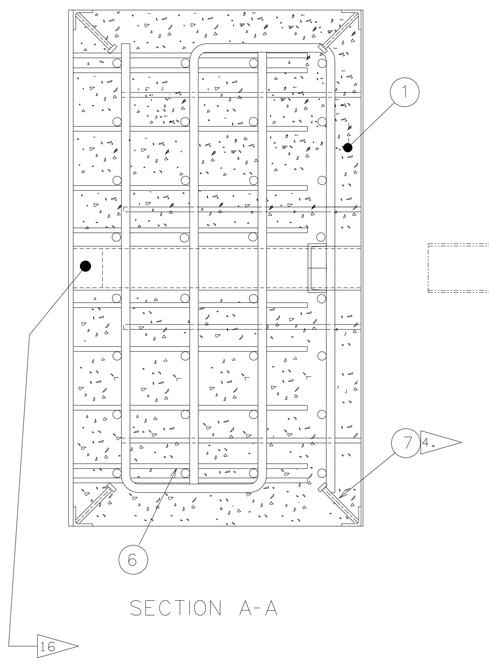

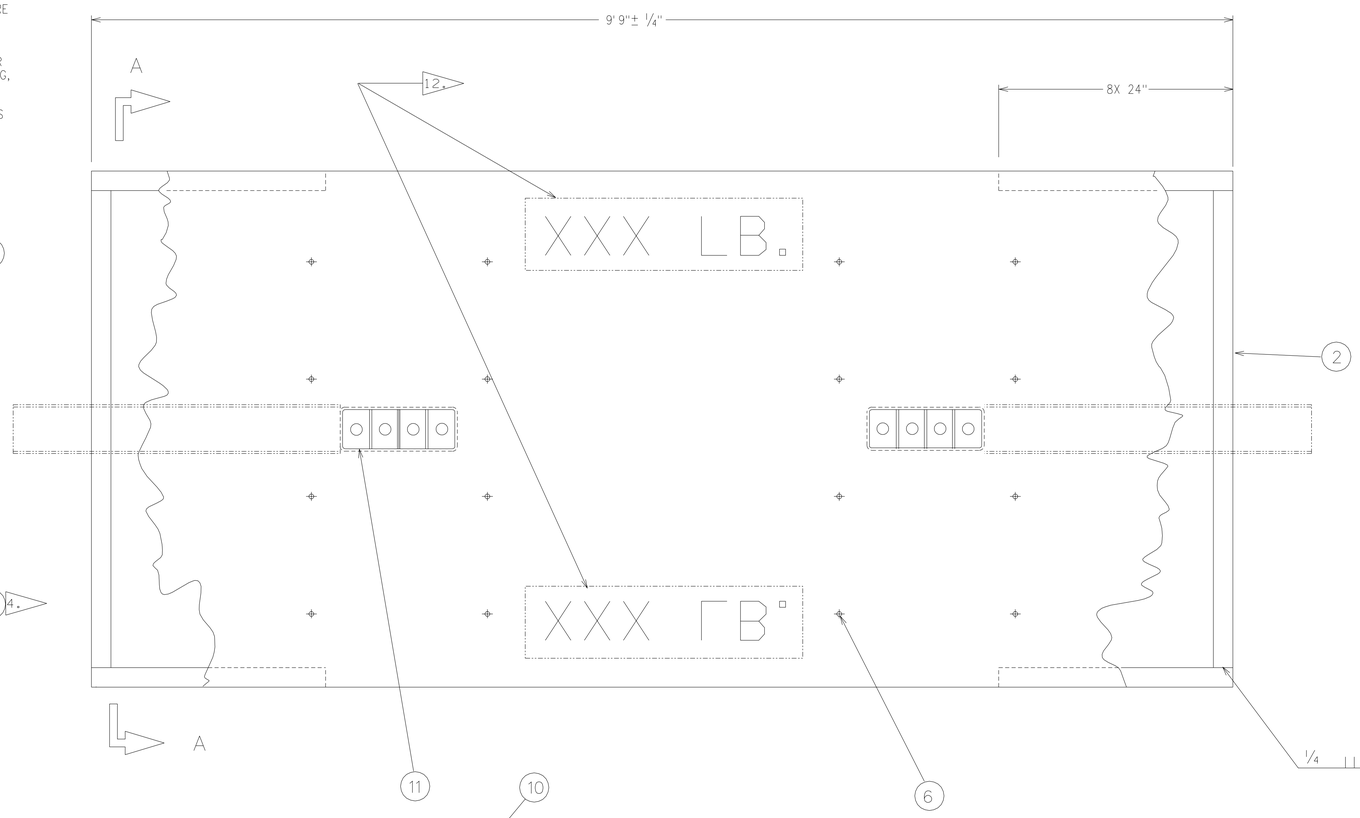

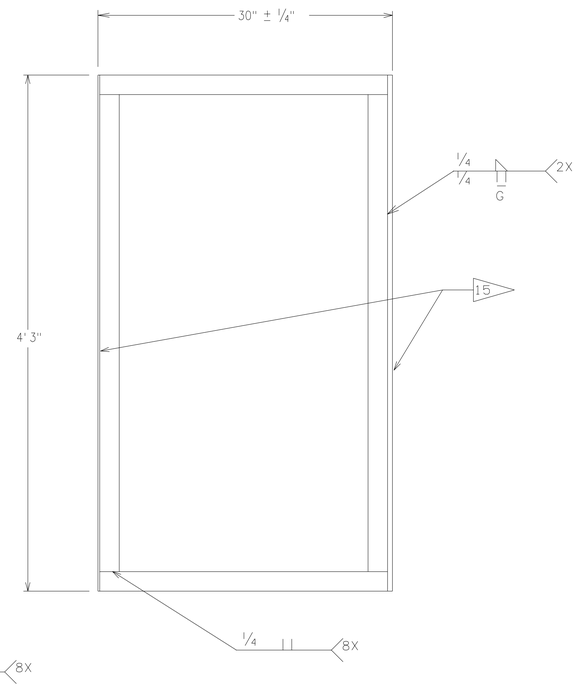

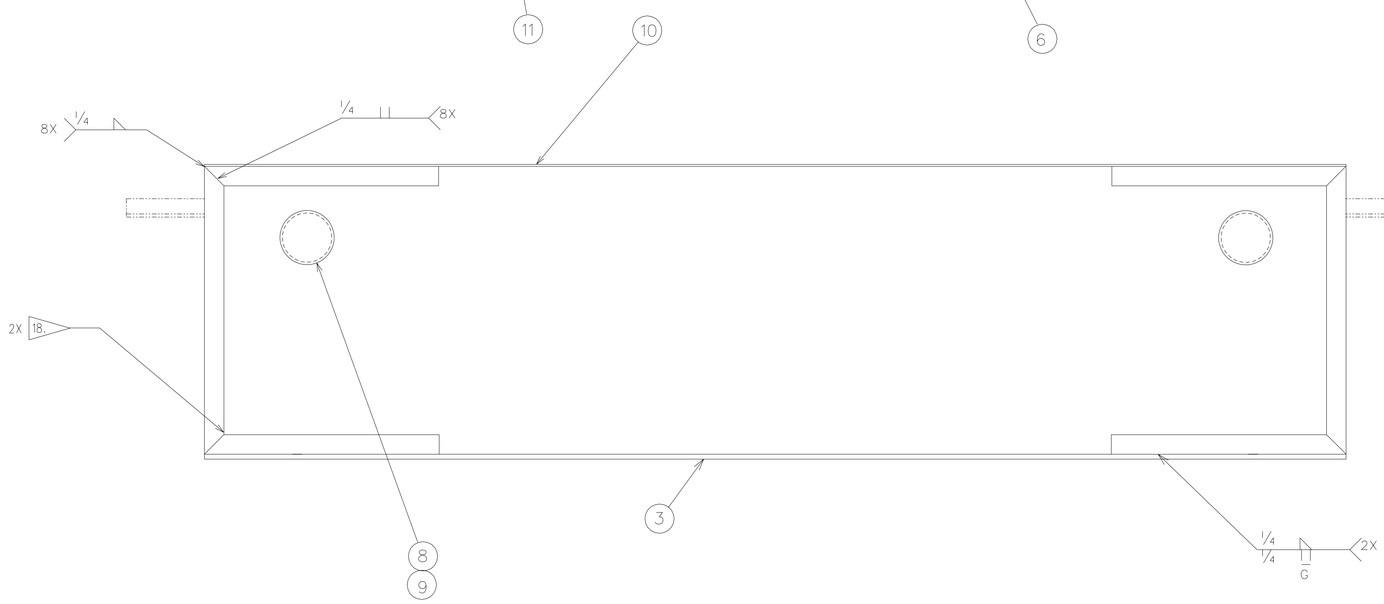

2	1			CHANNEL, AMERICAN STANDARD, CS X9	18		14
ARS	ARS	ARS		POLYURETHANE FOAM SEALANT DOW	16		13
6	6	6	ASTM A36	STEEL PLATE, 1/4" STOCK THK.			12
2	2	2		TUBE , RECTANGULAR, STEEL, 4" X 12" X 1/4 WALL			11
1	1	1	ASTM A572	STEEL, PLATE, 3/16, THK., GRADE 50			10
4	4	4	ASTM A36	STEEL, PLATE, 1/4THK			9
4	4	4		PIPE, STEEL, STANDARD WEIGHT, 5" NOM. DIA			8
28	28	28	101-053-005	HEADED ANCHOR 1/2 X 5-5/16	3,4,6		7
101	101	101	101-064-796	DEFORMED BAR ANCHOR 1/2 X 24-1/8	3,6		6
36	36	36	ASTM A615	BAR REINFORCING #7 GRADE 60			5
16	16	16	ASTM A615	BAR REINFORCING #6 GRADE 60			4
1	1	1	ASTM A572	PLATE 1/2 IN. STEEL, HIGH STRENGTH, LOW ALLOY GRADE 50			3
AR	AR	AR	ASTM A36	ANGLE 2 X 2 1/4 STEEL			2
AR	AR	AR	9906006	CONCRETE 4000 PSI COMPRESSIVE STRENGTH @ 28 DAYS	10		1
N	NA	NA	9912119	WELDING STEEL			
	NO REQD	NO REQD	PART/CONTROL NO	DESCRIPTION/MATERIAL	NOTE	SHEET ZONE	ITEM

R68318-300	R68318-200	R68318-100	

SHEET 1 2 3 4 5 6
ISSUE A A A
PART CLASSIFICATION: SEE TABULATION
TITLE: BLOCK, IMF, SPACE COMMAND (U)
DRAWING CLASSIFICATION: UNCLASSIFIED
SIZE: E
DRAWING NUMBER: R68318
CAGEC 14213 | SCALE 1:6 | SHEET 1 OF 3
STATUS: SA-REL-04/11/02
ORIGIN: SA-MSJ