PART NUMBER	CLASSIFICATION	"X" DIMENSION	APPLICATION	* REQUIRED PER DOOR	APPROXIMATE WEIGHT
R68086-100	UNCLASSIFIED	15 ½" ± ⅛"	BETWEEN BLOCKS	2 OR 4	21 LB.
R68086-200	UNCLASSIFIED	12"± ⅛"	BETWEEN BLOCKS	2 OR 4 (OPTIONAL)	16 LB.
R68086-300	UNCLASSIFIED	32 ½"± ¼"	APRON	2	42 LB.

*EARTH COVERED -2 OR DRIVE THROUGH -4

1. WELD AND INSPECT PER 9912119, CLASS II, USING E308 ELECTRODES PER AWS A5..4-811 OR E308 ELECTRODES OR RODS PER AWS 9-81.

DESIGN AGENCY PART NUMBER	REVISIONS						
	ISS	SHEET ZONE	PREPARED BY	DESCRIPTION	DATE	CHKR	APVD
SEE TABLE	A		C. MATTHEWS, 2996/ D. SWAHLAN, 5832				DS

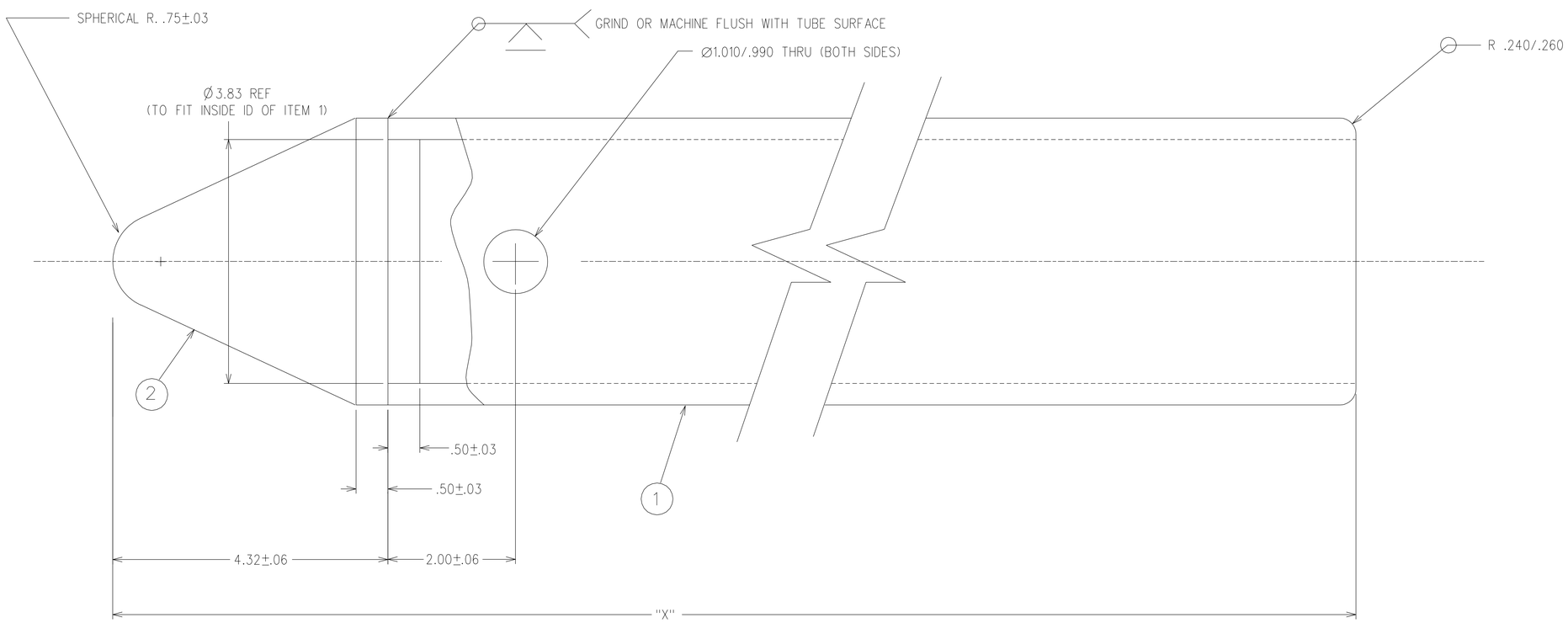

NO REQD	NO REQD	NO REQD	PART/CONTROL NO	DESCRIPTION/MATERIAL	NOTE	SHEET ZONE	ITEM
1	1	1		ROD, 304 S.S. 4.5 DIA			2
1	1	1		PIPE, 304 S.S., EXTRA STRONG, 4.5 OD, .337 WALL			1
NA	NA	NA	9912119	WELDING STEEL			

R68086-100 R68086-200 R68086-300

SHEET 1 2 3 4 5 6
ISSUE A

TITLE: PIN, LOCATING (U)

PART CLASSIFICATION: SEE TABLE

DRAWING CLASSIFICATION: UNCLASSIFIED

SIZE: D

DRAWING NUMBER: R68086

CAGEC 14213 | SCALE 1:1 | SHEET 1 OF 1

STATUS SA-REL-04/05/02 | ORIGIN SA-MSJ