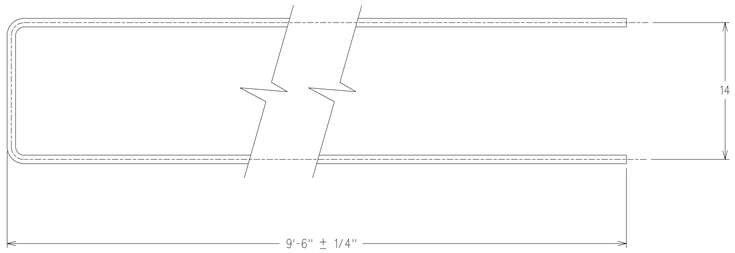

ITEM 4

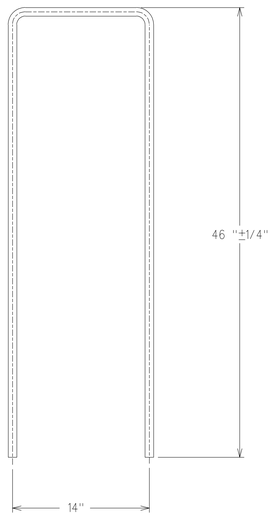

ITEM 5

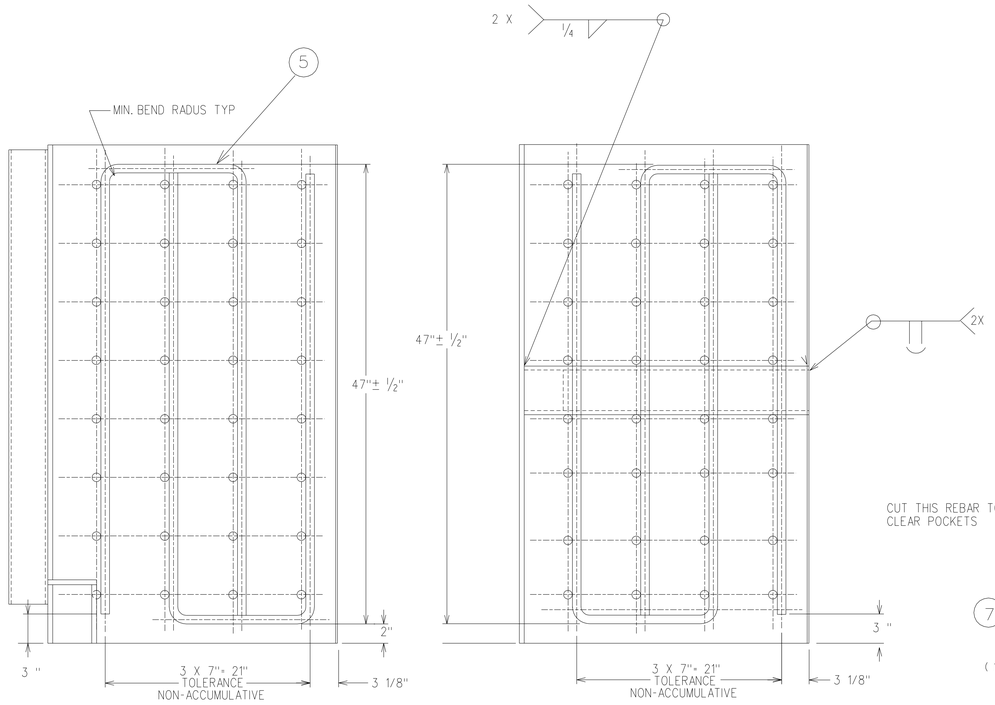

LAYER D

LAYER C

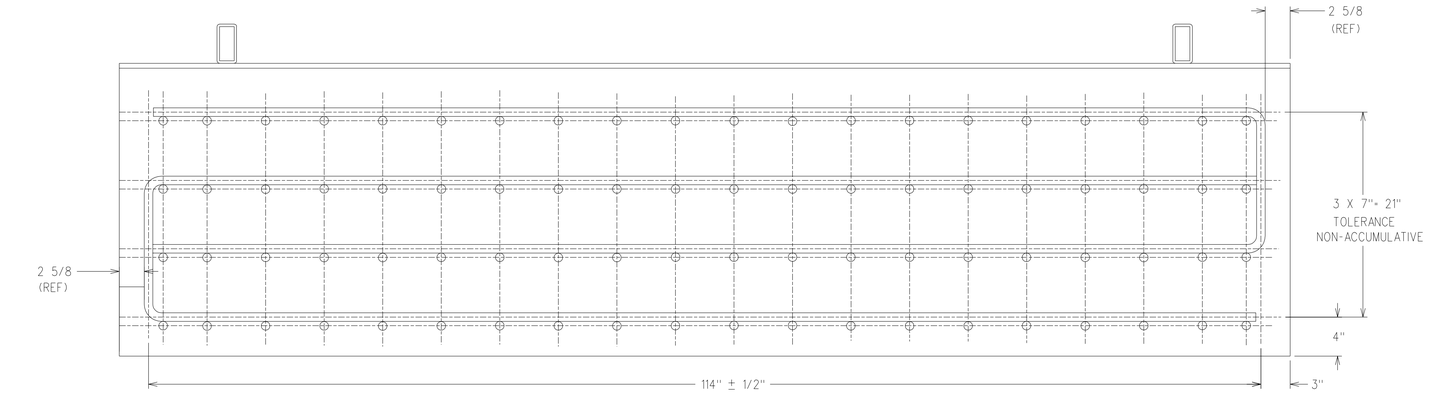

LAYER B

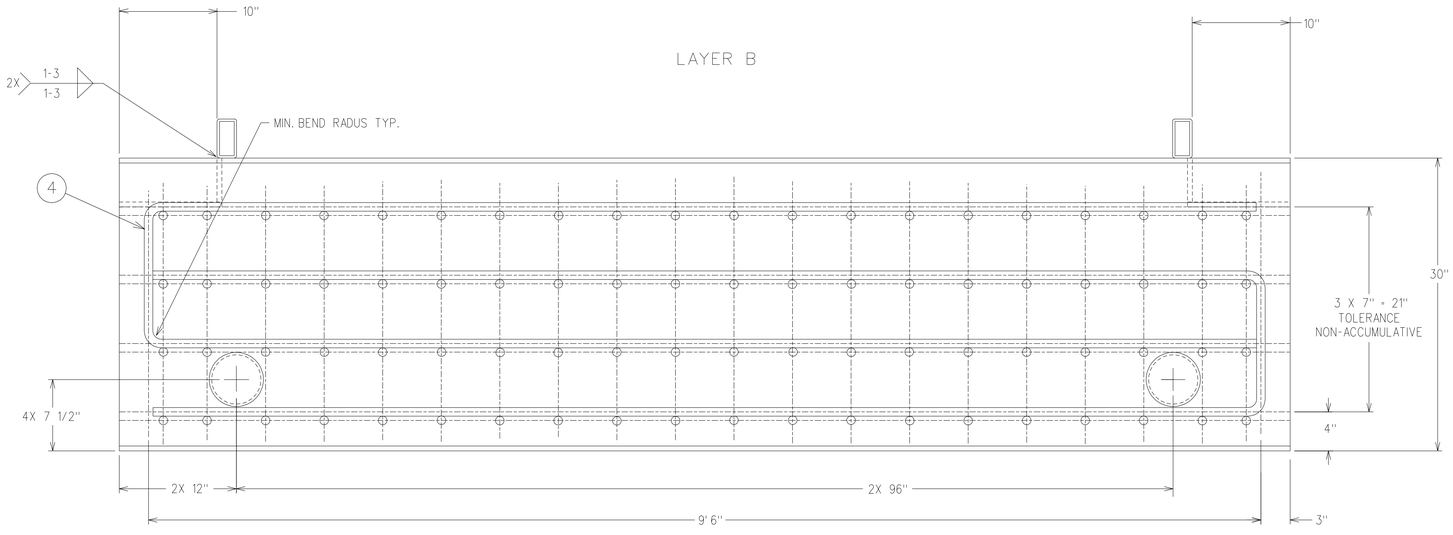

LAYER A

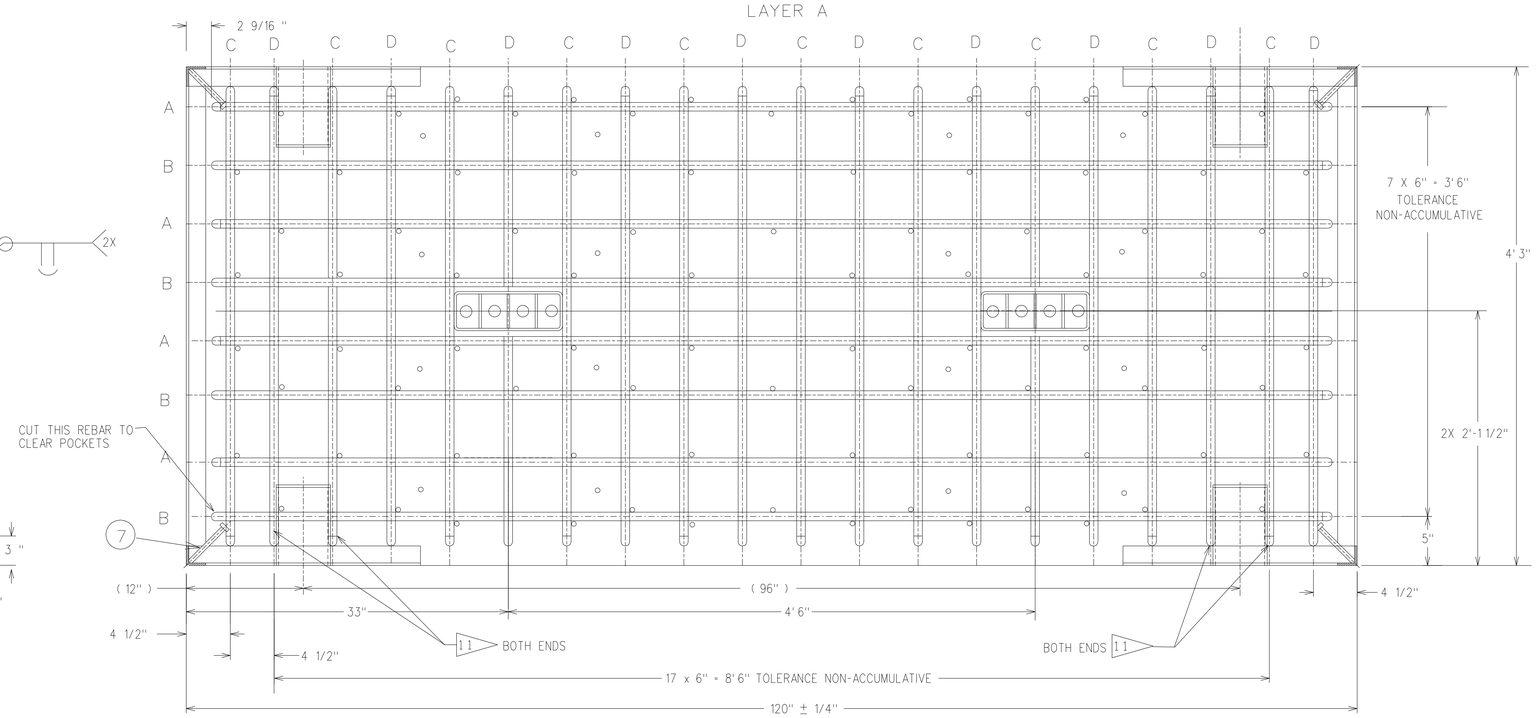

DRAWING NUMBER R68082		
DRAWING CLASSIFICATION UNCLASSIFIED		
SIZE E	CAGEC 14213	SCALE NONE
	ISSUE A	SHEET 2 OF 3
STATUS SA-REL-04/11/02		