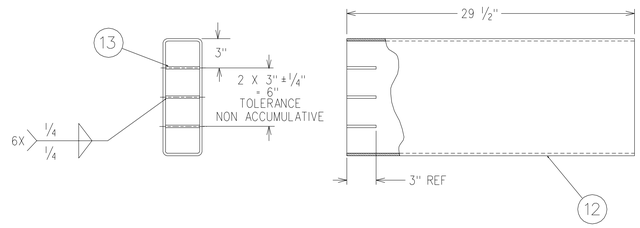

2 REQUIRED

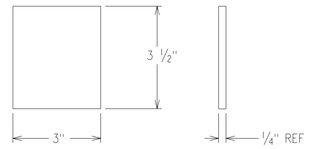

ITEM 13
SCALE 1/2
6 REQUIRED

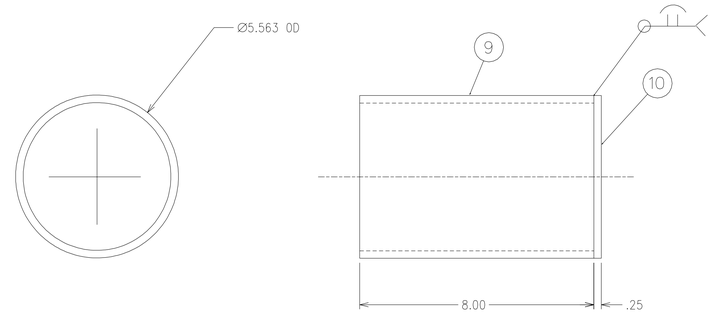

POCKET
SCALE 1/2
2 REQUIRED

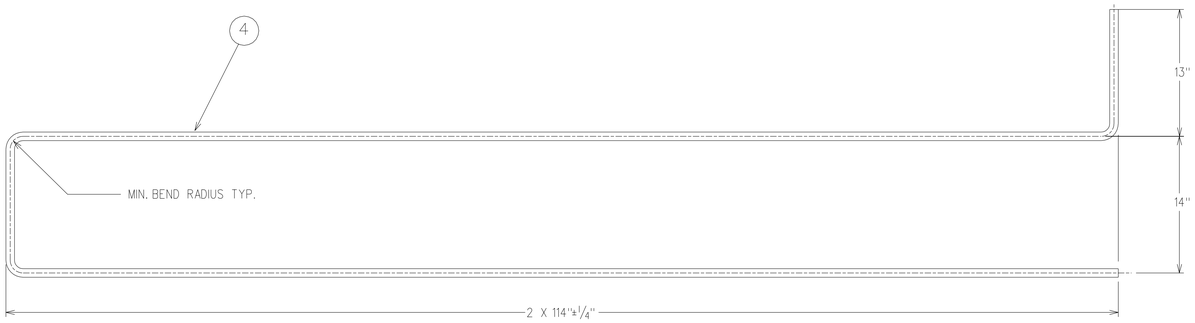

4 REQUIRED

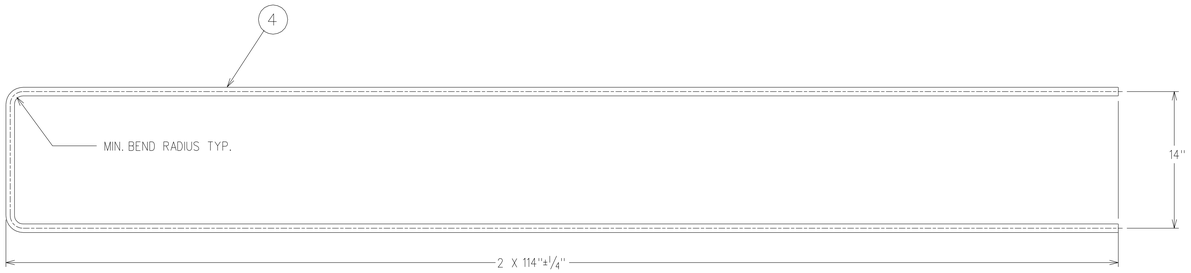

12 REQUIRED

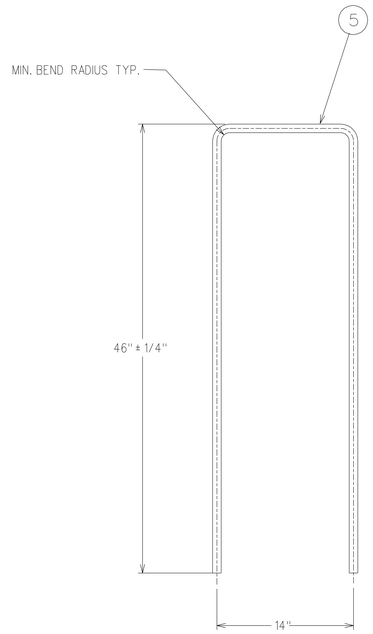

40 REQUIRED

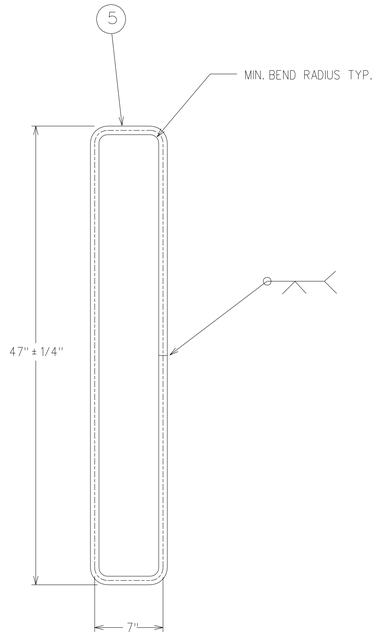

STIRRUP BAR
1 REQUIRED

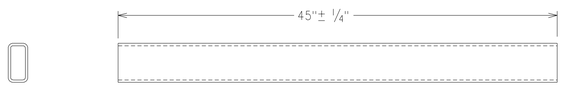

ITEM 15

DRAWING NUMBER R68081			
DRAWING CLASSIFICATION UNCLASSIFIED			
SIZE E	CAGEC 14213	SCALE 1/6	
	ISSUE A	SHEET 3 OF 4	
STATUS SA-REL-04/11/02			