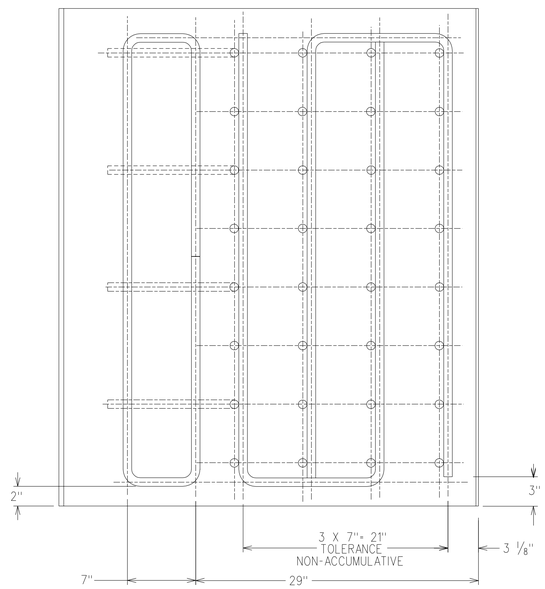

LAYER E

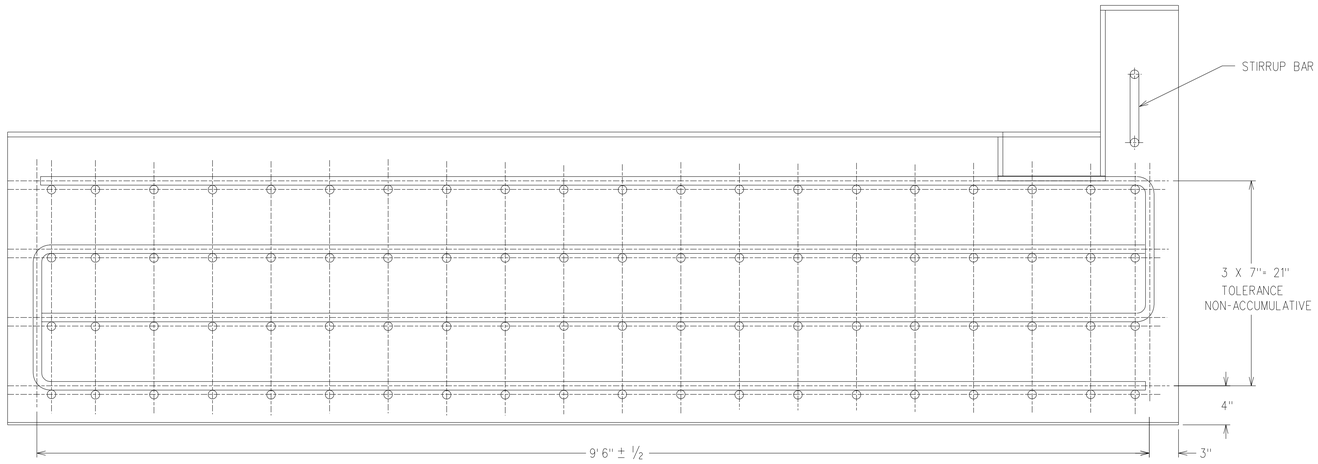

LAYER B

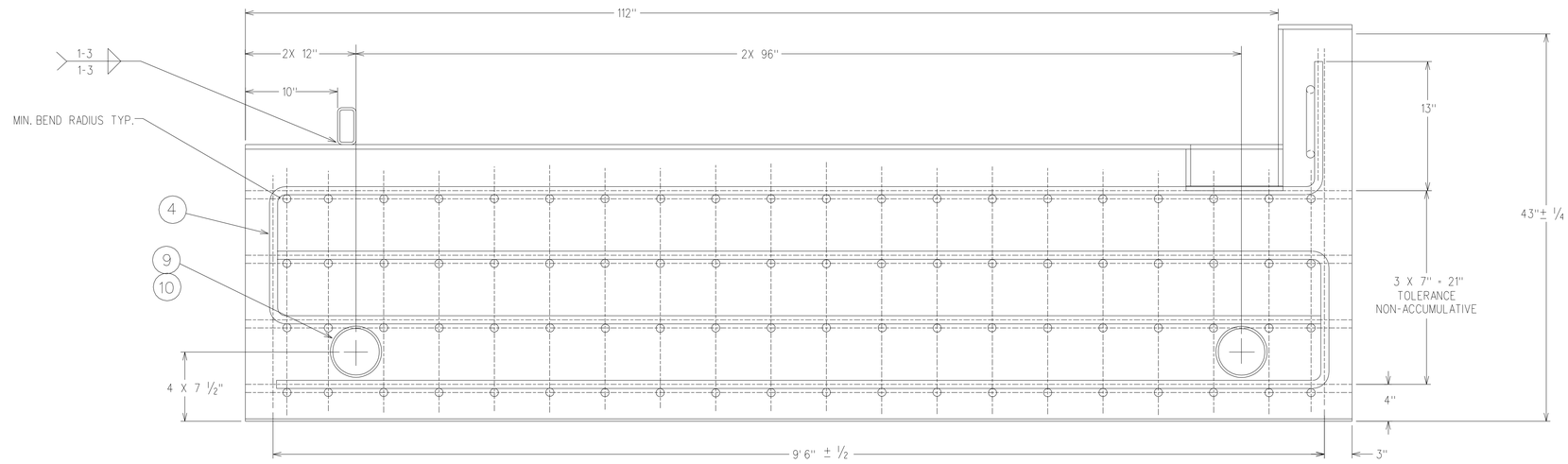

LAYER A

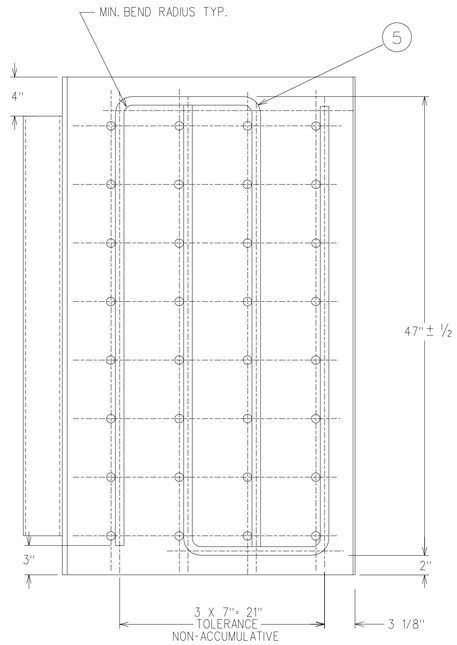

LAYER D

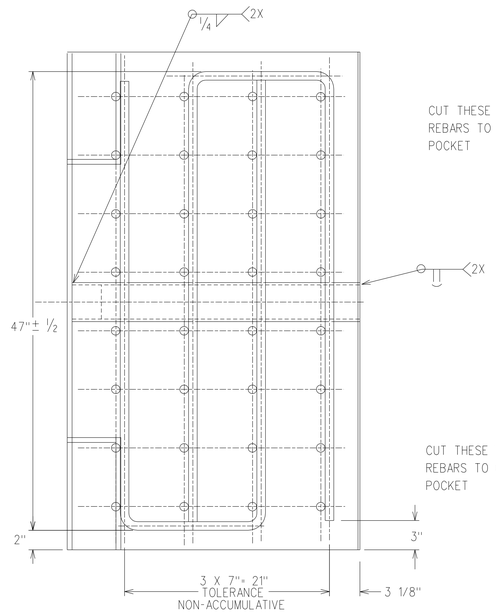

LAYER C

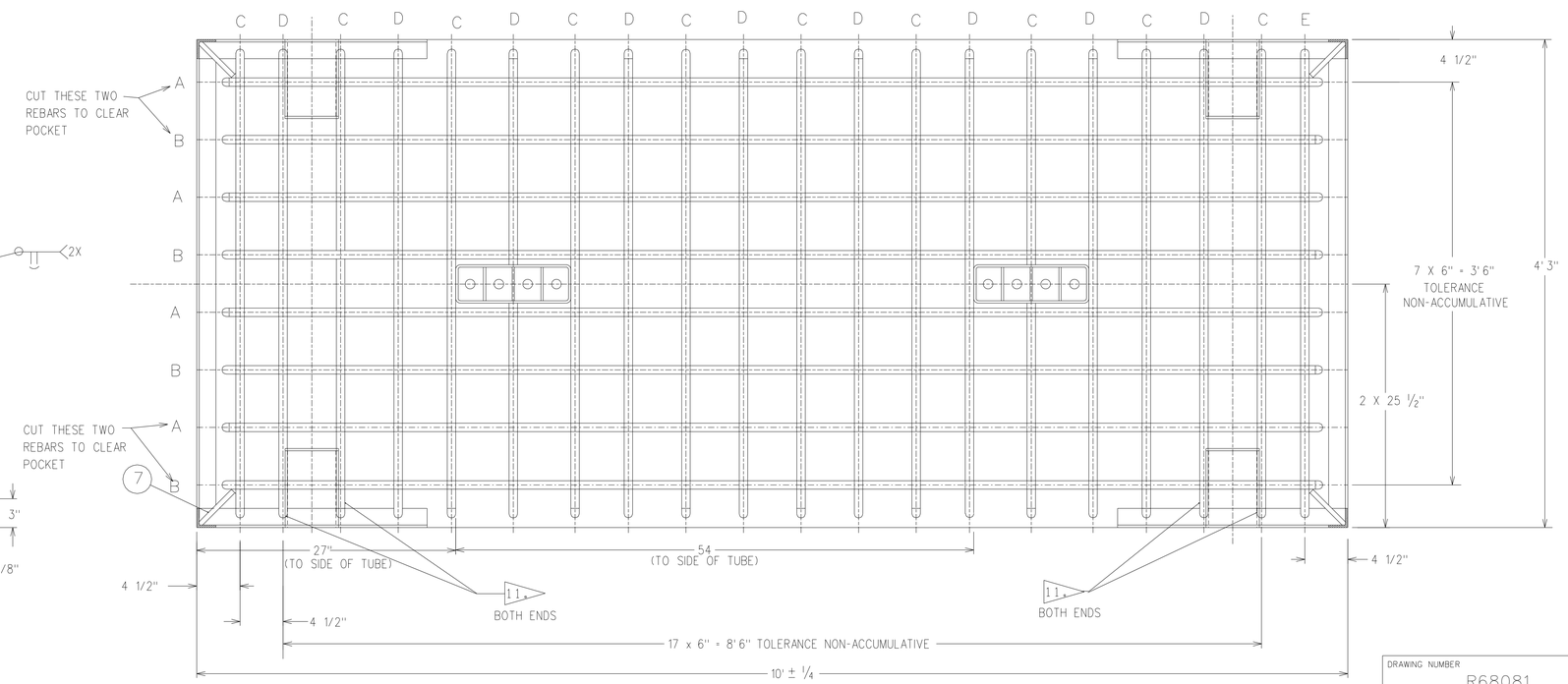

DRAWING NUMBER R68081		
DRAWING CLASSIFICATION UNCLASSIFIED		
SIZE E	CAGEC 14213	SCALE 1/6
	ISSUE A	SHEET 2 OF 4
STATUS SA-REL-04/11/02		